The Timken Company
4500 Mt Pleasant St. NW
N. Canton, OH 44720
Phone: (234) 262-3000
E-Mail: CustomerCAD@timken.com • **Web site:** www.timken.com

Timken Part Number 15580 - 15520, Tapered Roller Bearings - TS (Tapered Single) Imperial

This is the most basic and most widely used type of tapered roller bearing. It consists of two main separable parts: the cone (inner ring) assembly and the cup (outer ring). It is typically mounted in opposing pairs on a shaft.



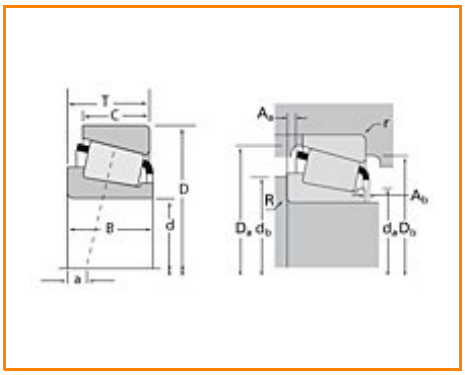

Specifications | Dimensions | Abutment and Fillet Dimensions | Basic Load Ratings | Factors

Specifications

Series	15500
Cone Part Number	15580
Cup Part Number	15520
Design Units	Imperial
Bearing Weight	0.200 Kg 0.4 lb
Cage Type	Stamped Steel

Dimensions

d - Bore	26.988 mm 1.0625 in

D - Cup Outer Diameter	57.150 mm 2.2500 in
B - Cone Width	17.463 mm 0.6875 in
C - Cup Width	13.495 mm 0.5313 in
T - Bearing Width	17.463 mm 0.6875 in

Abutment and Fillet Dimensions

R - Cone Backface "To Clear" Radius[1]	3.560 mm 0.14 in
r - Cup Backface "To Clear" Radius[2]	1.52 mm 0.06 in
da - Cone Frontface Backing Diameter	32.00 mm 1.26 in
db - Cone Backface Backing Diameter	38.61 mm 1.52 in
Da - Cup Frontface Backing Diameter	53.10 mm 2.11 in
Db - Cup Backface Backing Diameter	51.05 mm 2.01 in
Ab - Cage-Cone Frontface Clearance	2.5 mm 0.1 in
Aa - Cage-Cone Backface Clearance	0 mm 0 in
a - Effective Center Location[3]	-5.1 mm -0.2 in

Basic Load Ratings

C90 - Dynamic Radial Rating (90 million revolutions)[4]	11900 N 2680 lbf
C1 - Dynamic Radial Rating (1 million revolutions)[5]	46000 N 10300 lbf
C0 - Static Radial Rating	50100 N 11300 lbf
C_{a90} - Dynamic Thrust Rating (90 million revolutions)[6]	7070 N 1590 lbf

Factors

K - Factor[7]	1.69
e - ISO Factor[8]	0.35
Y - ISO Factor[9]	1.73
G1 - Heat Generation Factor (Roller-Raceway)	12.7
G2 - Heat Generation Factor (Rib-Roller End)	10.3
Cg - Geometry Factor	0.0577

[1] These maximum fillet radii will be cleared by the bearing corners.

[2] These maximum fillet radii will be cleared by the bearing corners.

[3] Negative value indicates effective center inside cone backface.

[4] Based on 90 x 10^6 revolutions L_{10} life, for The Timken Company life calculation method. C_{90} and C_{a90} are radial and thrust values.

[5] Based on 1 x 10^6 revolutions L_{10} life, for the ISO life calculation method.

[6] Based on 90 x 10^6 revolutions L_{10} life, for The Timken Company life calculation method. C_{90} and C_{a90} are radial and thrust values for a single-row, $C_{90(2)}$ is the two-row radial value.

[7] These factors apply for both inch and metric calculations. Consult your Timken representative for instruction on use.

[8] These factors apply for both inch and metric calculations. Consult your Timken representative for instruction on use.

[9] These factors apply for both inch and metric calculations. Consult your Timken representative for instruction on use.

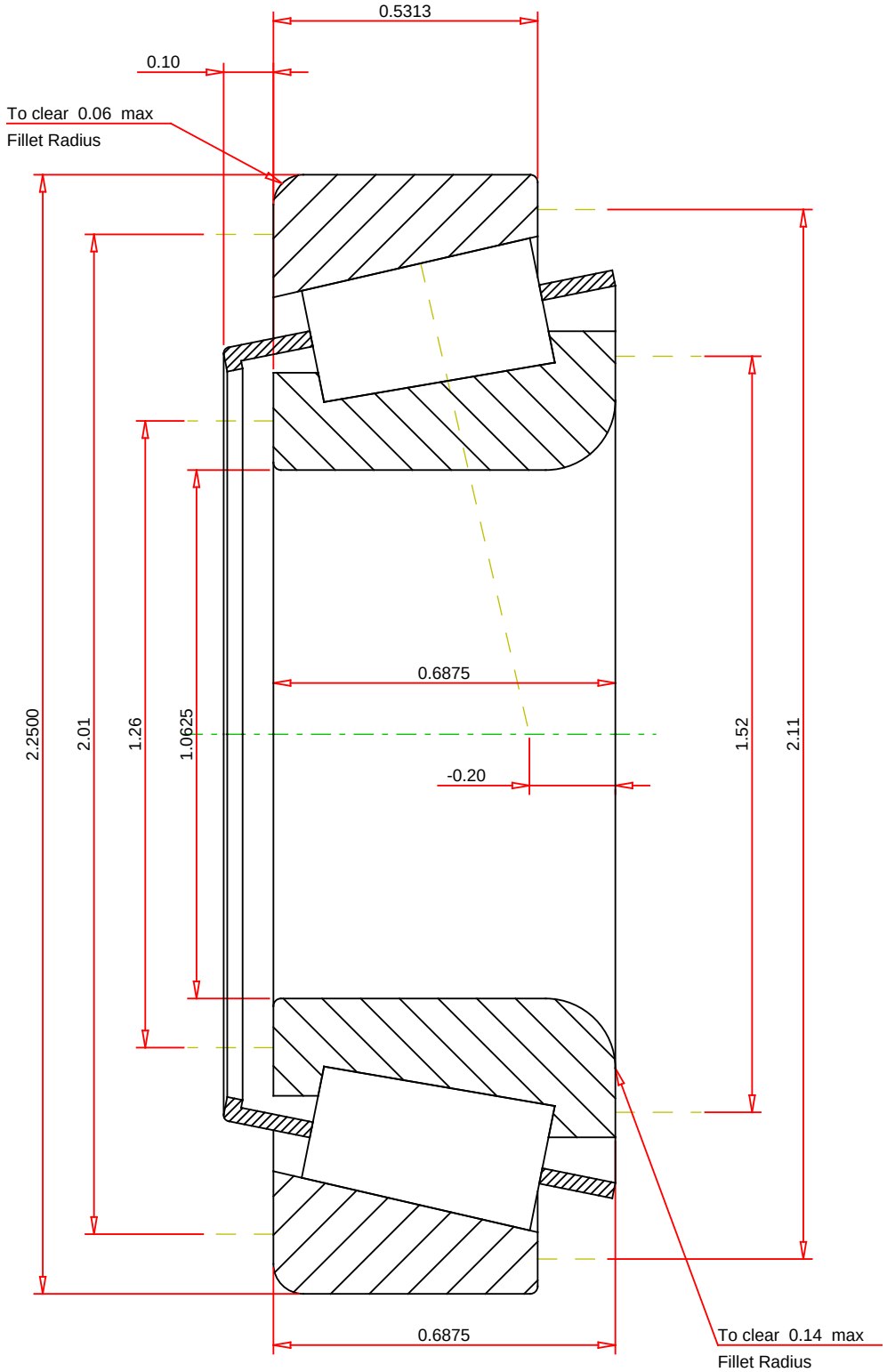

IMPERIAL UNITS

ISO Factor - e	0.35	
ISO Factor - Y	1.73	
Bearing Weight	0.4	lb
Number of Rollers Per Row	17	
Effective Center Location	-0.2	inch

TIMKEN®

THE TIMKEN COMPANY
NORTH CANTON, OHIO USA

15580 - 15520
TS BEARING ASSEMBLY

K Factor	1.69	
Dynamic Radial Rating - C90	11900	lbf
Dynamic Thrust Rating - Ca90	7070	lbf
Static Radial Rating - C0	50100	lbf
Dynamic Radial Rating - C1	46000	lbf

Every reasonable effort has been made to ensure the accuracy of the information contained in this writing, but no liability is accepted for errors, omissions or for any other reason.

FOR DISCUSSION ONLY