The Timken Company
4500 Mt Pleasant St. NW
N. Canton, OH 44720
Phone: (234) 262-3000
E-Mail: CustomerCAD@timken.com • **Web site:** www.timken.com

Part Number SUCSFLQK206-19-IP69K/FVSL613, Corrosion-Resistant QuiKlean® Two-Bolt Flanged Mounted Bearings - Set Screw Locking



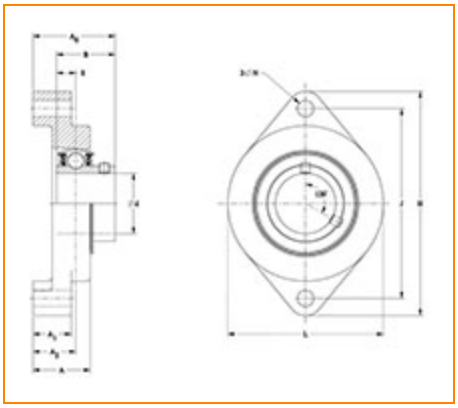

Specifications | Basic Load Ratings | Dimensions

Specifications

Bore Size	1 3/16 in
Seal Type	IP69K Seal
Housing Material	Cast Stainless Steel
Bearing Number	SUC206-19-IP69K/FVSL613
Lubrication Type	Food Grade Solid Lube
Locking Style	Set Screw Locking
Housing Construction	Two-Bolt Flange
Bearing Style	Ball Bearing

Basic Load Ratings

Dynamic Load Rating[1]	3710 lbf 16500 N
Static Load Rating	2035 lbf 9050 N

Dimensions

Total Length H	5.590 in 142.0 mm
Total Height L	3.125 in 79.4 mm
Total Width A0	2.077 in 52.8 mm
Bolt Hole Spacing J	4.594 in 116.7 mm
Base Thickness A1	1.000 in 25.4 mm
Housing Width A	1.719 in 43.7 mm
Bolt Hole Size N	0.469 in 11.9 mm
Center of Bearing from Housing End A2	1.203 in 30.6 mm
Center of Bearing from Bearing End S	0.626 in 15.9 mm
Inner Ring Width B	1.500 in 38.1 mm

[1] Based on 90×10^6 revolutions L_{10} life, for The Timken Company life calculation method. C_{90} and C_{a90} are radial and thrust values.

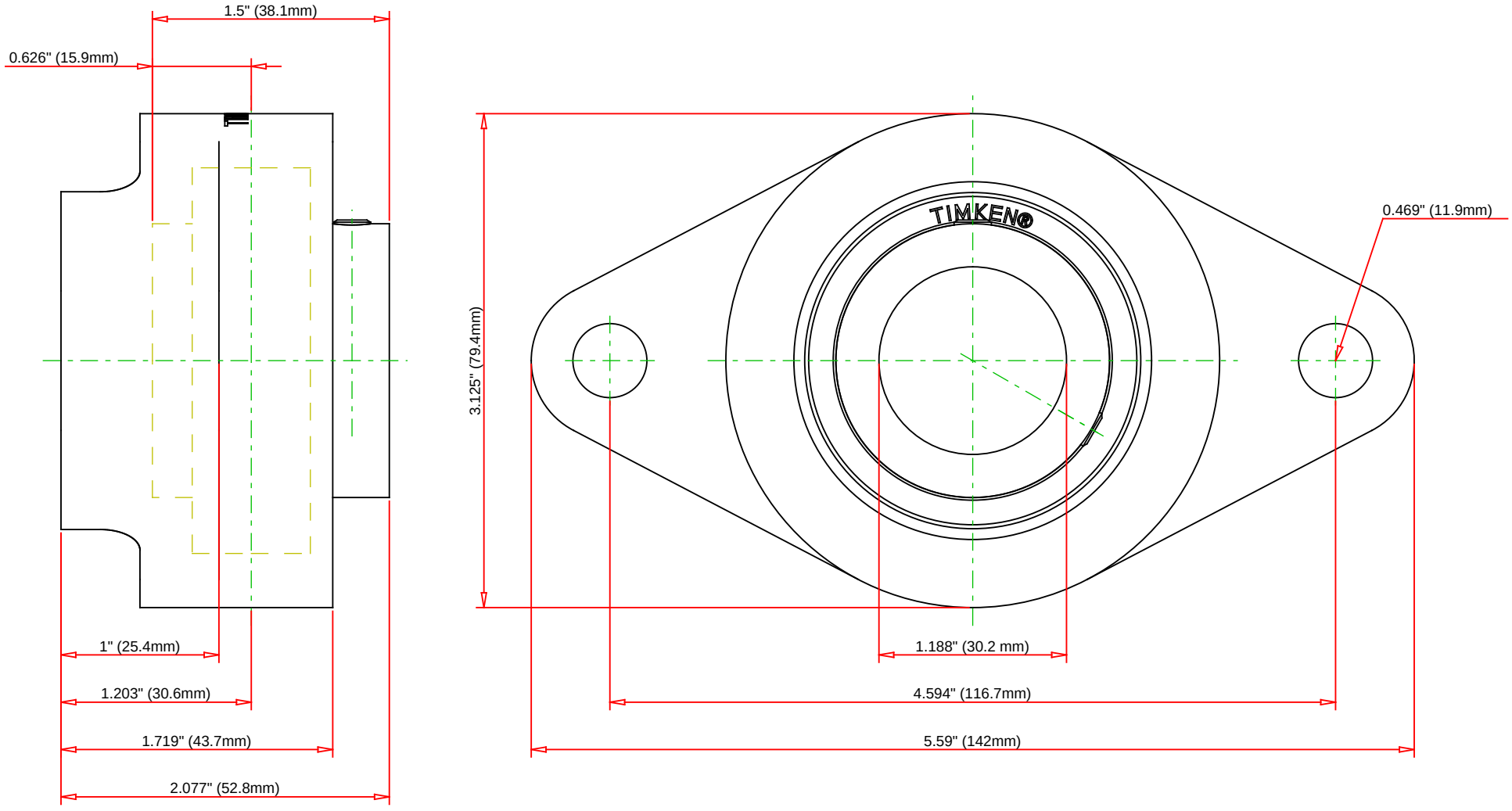

Bearing Number	SUC206-19-IP69K/FVSL613				
Load Ratings - C_r	3710	lbf	16500	N	
Load Ratings - C_{0r}	2035	lbf	9050	N	
Lubrication Type	Food Grade Solid Lube				
Housing Material	Cast Stainless Steel				

TIMKEN

THE TIMKEN COMPANY
NORTH CANTON, OHIO USA

SUCSFLQK206-19-IP69K/FVSL613

Corrosion-Resistant QuiKlean® Two-Bolt Flanged Mounted Bearings - Set Screw Locking

Every reasonable effort has been made to ensure the accuracy of the information contained in this writing, but no liability is accepted for errors, omissions or for any other reason.

FOR DISCUSSION ONLY