The Timken Company
4500 Mt Pleasant St. NW
N. Canton, OH 44720
Phone: (234) 262-3000
E-Mail: CustomerCAD@timken.com • **Web site:** www.timken.com

Part Number SUCSFLQK205-16-IP69K/FVSL613, Corrosion-Resistant QuiKlean® Two-Bolt Flanged Mounted Bearings - Set Screw Locking



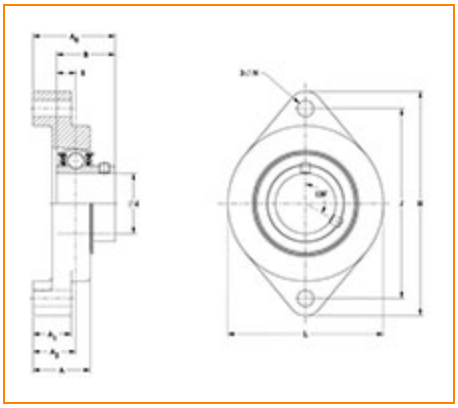

Specifications | Basic Load Ratings | Dimensions

Specifications

Bore Size	1.0000 in
Seal Type	IP69K Seal
Housing Material	Cast Stainless Steel
Bearing Number	SUC205-16-IP69K/FVSL613
Lubrication Type	Food Grade Solid Lube
Locking Style	Set Screw Locking
Housing Construction	Two-Bolt Flange
Bearing Style	Ball Bearing

Basic Load Ratings

Dynamic Load Rating[1]	2676 lbf 11900 N
Static Load Rating	1417 lbf 6300 N

Dimensions

Total Length H	4.890 in 124.2 mm
Total Height L	2.660 in 67.6 mm
Total Width A0	1.925 in 48.9 mm
Bolt Hole Spacing J	3.890 in 98.8 mm
Base Thickness A1	1.000 in 25.4 mm
Housing Width A	1.590 in 40.4 mm
Bolt Hole Size N	0.469 in 11.9 mm
Center of Bearing from Housing End A2	1.145 in 29.1 mm
Center of Bearing from Bearing End S	0.563 in 14.3 mm
Inner Ring Width B	1.343 in 34.1 mm

[1] Based on 90×10^6 revolutions L_{10} life, for The Timken Company life calculation method. C_{90} and C_{a90} are radial and thrust values.

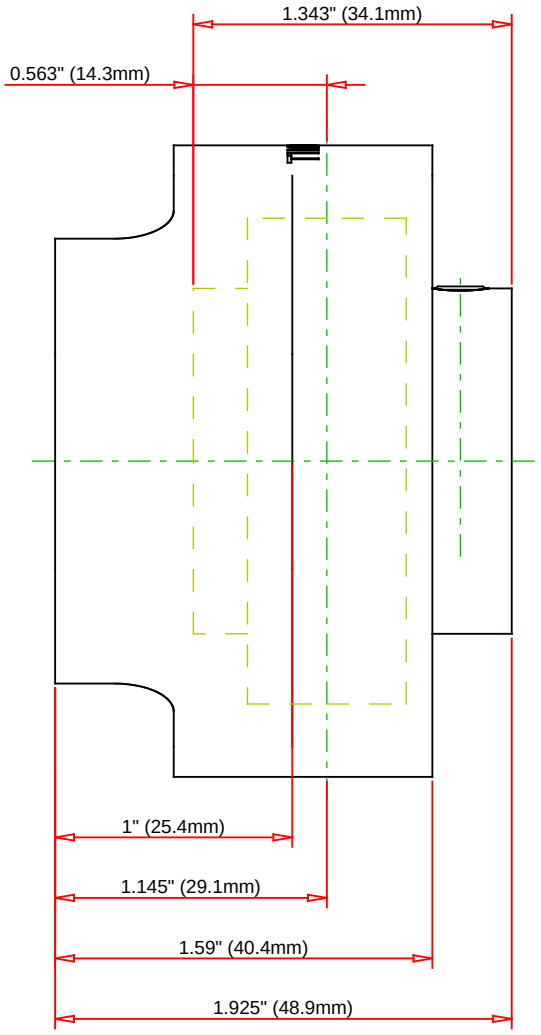

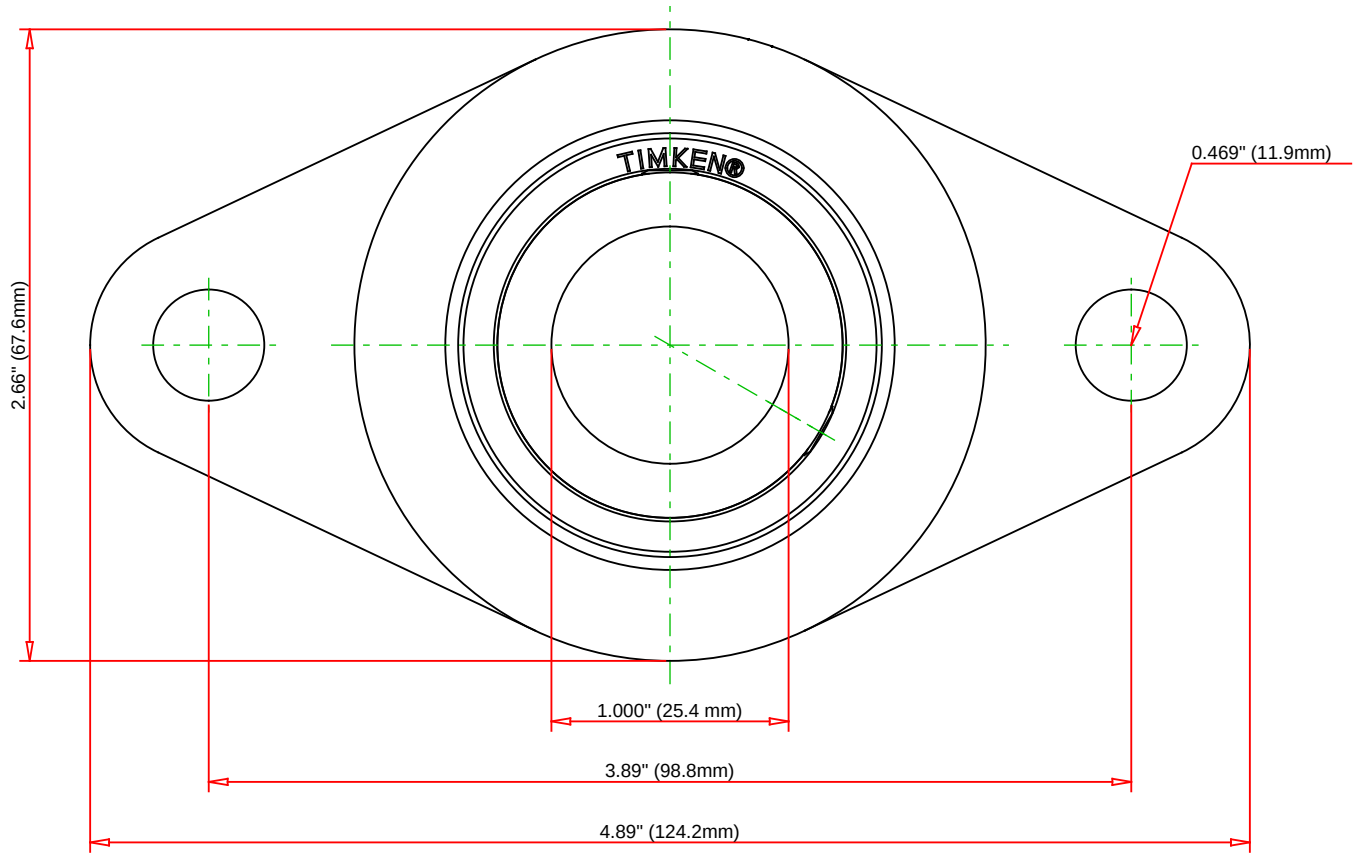

Bearing Number	SUC205-16-IP69K/FVSL613				
Load Ratings - C_r	2676	lbf	11900	N	
Load Ratings - C_{0r}	1417	lbf	6300	N	
Lubrication Type	Food Grade Solid Lube				
Housing Material	Cast Stainless Steel				

TIMKEN

THE TIMKEN COMPANY
NORTH CANTON, OHIO USA

SUCSFLQK205-16-IP69K/FVSL613

Corrosion-Resistant QuiKlean® Two-Bolt Flanged Mounted Bearings - Set Screw Locking

Every reasonable effort has been made to ensure the accuracy of the information contained in this writing, but no liability is accepted for errors, omissions or for any other reason.

FOR DISCUSSION ONLY