**The Timken Company**
4500 Mt Pleasant St. NW
N. Canton, OH 44720
**Phone:** (234) 262-3000
**E-Mail:** CustomerCAD@timken.com • **Web site:** www.timken.com

# Part Number SUCSFLQK204-12-IP69K/F, Corrosion-Resistant QuiKlean® Two-Bolt Flanged Mounted Bearings - Set Screw Locking



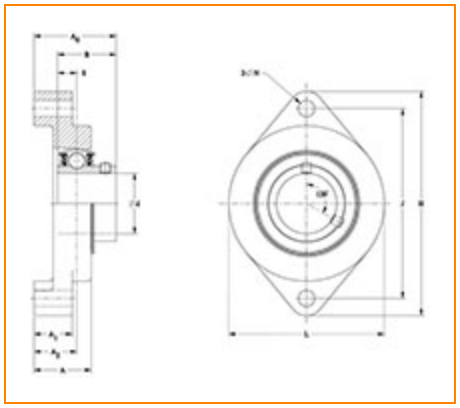

Specifications | Basic Load Ratings | Dimensions

## Specifications

| | |
|---|---|
| **Bore Size** | 0.7500 in |
| **Seal Type** | IP69K Seal |
| **Housing Material** | Cast Stainless Steel |
| **Bearing Number** | SUC204-12-IP69K/F |
| **Lubrication Type** | Standard Food Safe Grease |
| **Locking Style** | Set Screw Locking |
| **Housing Construction** | Two-Bolt Flange |
| **Bearing Style** | Ball Bearing |

## Basic Load Ratings

| | |
|---|---|
| **Dynamic Load Rating[1]** | 2451 lbf<br>10900 N |
| **Static Load Rating** | 1203 lbf<br>5350 N |

## Dimensions

| | |
|---|---|
| **Total Length H** | 4.407 in<br>112.0 mm |
| **Total Height L** | 2.420 in<br>61.5 mm |
| **Total Width A0** | 1.814 in<br>46.1 mm |
| **Bolt Hole Spacing J** | 3.532 in<br>89.7 mm |
| **Base Thickness A1** | 0.940 in<br>23.9 mm |
| **Housing Width A** | 1.530 in<br>38.9 mm |
| **Bolt Hole Size N** | 0.406 in<br>10.3 mm |
| **Center of Bearing from Housing End A2** | 1.094 in<br>27.8 mm |
| **Center of Bearing from Bearing End S** | 0.5 in<br>12.7 mm |
| **Inner Ring Width B** | 1.220 in<br>31.0 mm |

[1] Based on $90 \times 10^6$ revolutions $L_{10}$ life, for The Timken Company life calculation method. $C_{90}$ and $C_{a90}$ are radial and thrust values.

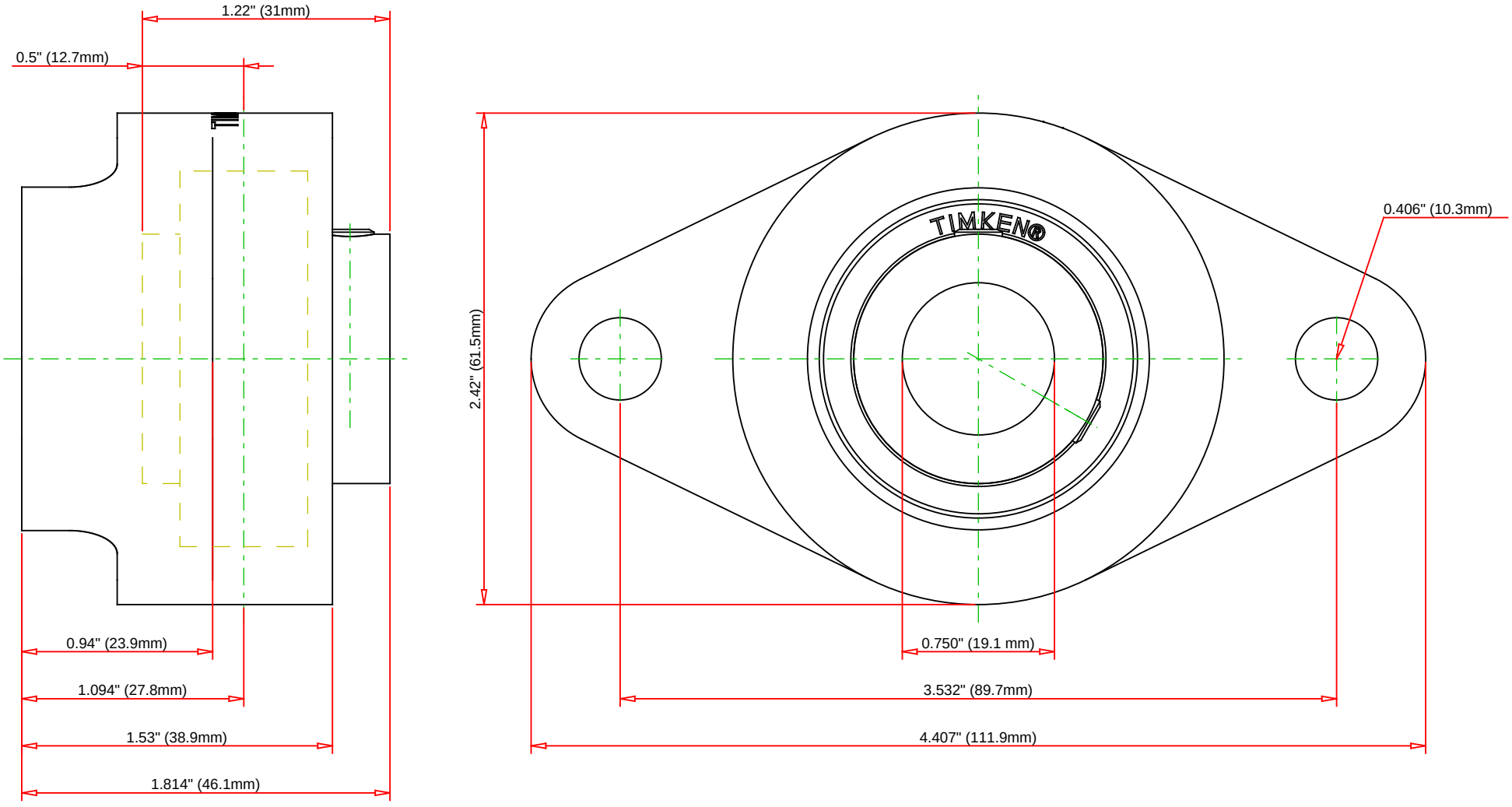


| | | | | | |
|---|---|---|---|---|---|
| Bearing Number | SUC204-12-IP69K/F | | | | |
| Load Ratings - $C_r$ | 2451 | lbf | 10900 | N | |
| Load Ratings - $C_{0r}$ | 1203 | lbf | 5350 | N | |
| Lubrication Type | Standard Food Safe Grease | | | | |
| Housing Material | Cast Stainless Steel | | | | |

TIMKEN

THE TIMKEN COMPANY
NORTH CANTON, OHIO USA

# SUCSFLQK204-12-IP69K/F

Corrosion-Resistant QuiKlean® Two-Bolt Flanged Mounted Bearings - Set Screw Locking

Every reasonable effort has been made to ensure the accuracy of the information contained in this writing, but no liability is accepted for errors, omissions or for any other reason.

FOR DISCUSSION ONLY