The Timken Company
4500 Mt Pleasant St. NW
N. Canton, OH 44720
Phone: (234) 262-3000
E-Mail: CustomerCAD@timken.com • **Web site:** www.timken.com

Part Number SUCSFL210-IP69K/F, Corrosion-Resistant Two-Bolt Flanged Mounted Bearings - Set Screw Locking



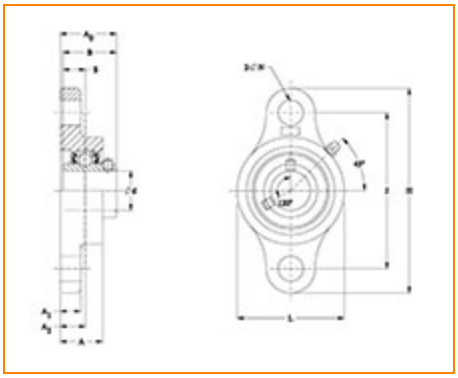

Specifications | Dimensions | Basic Load Ratings

Specifications

Bore Size	50 mm
Seal Type	IP69K Seal
Housing Material	Cast Stainless Steel
Bearing Number	SUC210-IP69K/F
Lubrication Type	Standard Food Safe Grease
Locking Style	Set Screw Locking
Housing Construction	Two-Bolt Flange
Bearing Style	Ball Bearing

Dimensions

Total Length H	7.756 in 197.0 mm
Total Height L	4.173 in 106.0 mm
Total Width A0	2.149 in 54.6 mm
Bolt Hole Spacing J	6.181 in 157.0 mm
Housing Width A	1.575 in 40.0 mm
Bolt Hole Size N	0.748 in 19.0 mm
Center of Bearing from Housing End A2	0.866 in 22.0 mm
Center of Bearing from Bearing End S	0.748 in 19.0 mm
Inner Ring Width B	2.031 in 51.6 mm

Basic Load Ratings

Static Load Rating	4182 lbf 18600 N
Dynamic Load Rating	6700 lbf 29800 N

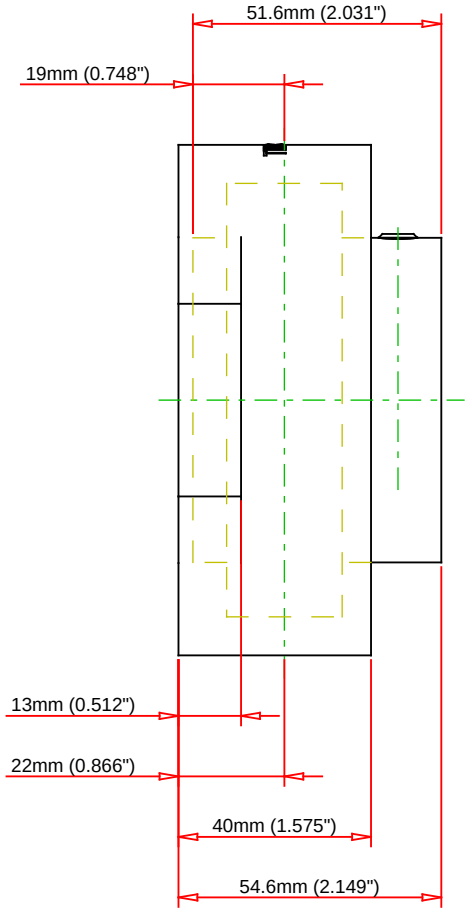

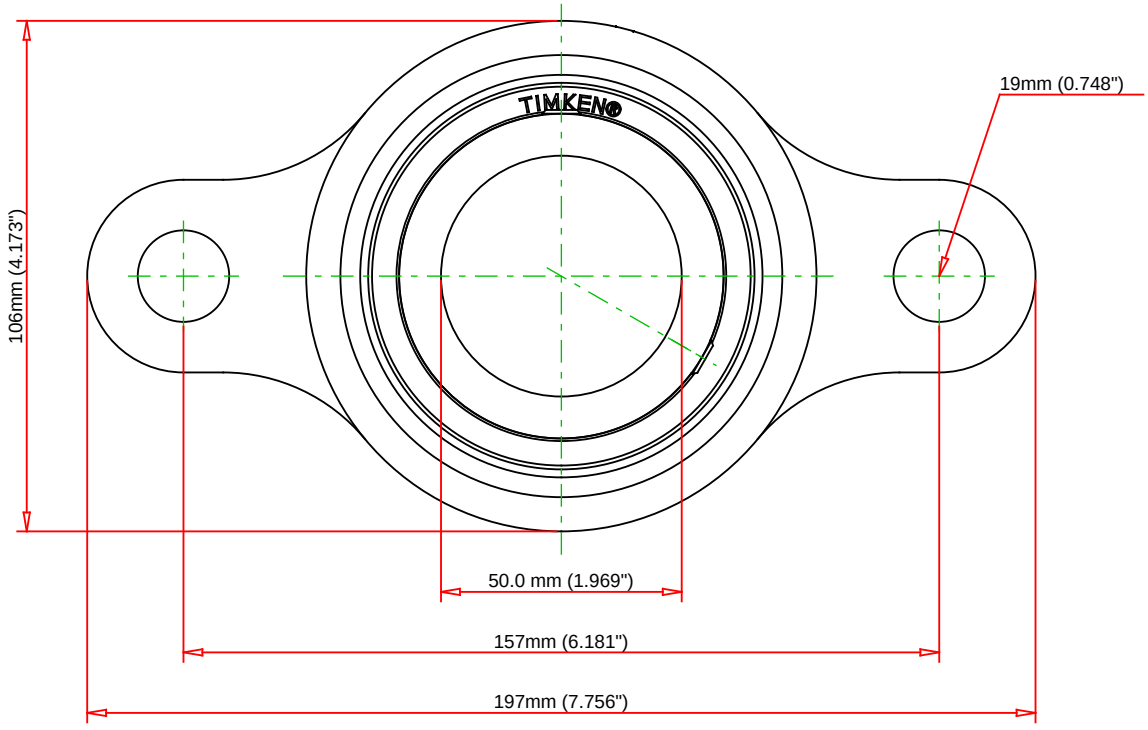

Bearing Number	SUC210-IP69K/F				
Load Ratings - C_r	6700	lbf	29800	N	
Load Ratings - C_{0r}	4182	lbf	18600	N	
Lubrication Type	Standard Food Safe Grease				
Housing Material	Cast Stainless Steel				

TIMKEN

THE TIMKEN COMPANY
NORTH CANTON, OHIO USA

SUCSFL210-IP69K/F

Corrosion-Resistant Two-Bolt Flanged Mounted Bearings - Set Screw Locking

Every reasonable effort has been made to ensure the accuracy of the information contained in this writing, but no liability is accepted for errors, omissions or for any other reason.

FOR DISCUSSION ONLY