The Timken Company
4500 Mt Pleasant St. NW
N. Canton, OH 44720
Phone: (234) 262-3000
E-Mail: CustomerCAD@timken.com • **Web site:** www.timken.com

Part Number SUCSFL209-27-IP69K/F, Corrosion-Resistant Two-Bolt Flanged Mounted Bearings - Set Screw Locking



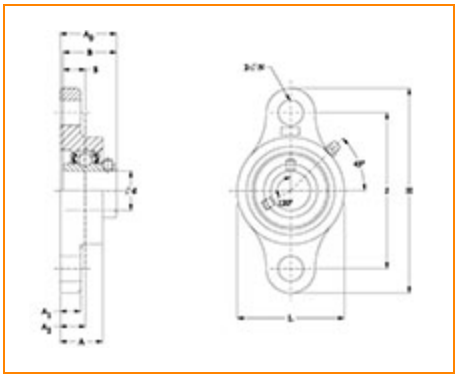

Specifications | Dimensions | Basic Load Ratings

Specifications

Bore Size	1 11/16 in
Seal Type	IP69K Seal
Housing Material	Cast Stainless Steel
Bearing Number	SUC209-27-IP69K/F
Lubrication Type	Standard Food Safe Grease
Locking Style	Set Screw Locking
Housing Construction	Two-Bolt Flange
Bearing Style	Ball Bearing

Dimensions

Total Length H	7.402 in 188.0 mm
Total Height L	3.937 in 100.0 mm
Total Width A0	2.055 in 52.2 mm
Bolt Hole Spacing J	5.827 in 148.0 mm
Housing Width A	1.496 in 38.0 mm
Bolt Hole Size N	0.748 in 19.0 mm
Center of Bearing from Housing End A2	0.866 in 22.0 mm
Center of Bearing from Bearing End S	0.748 in 19.0 mm
Inner Ring Width B	1.937 in 49.2 mm

Basic Load Ratings

Static Load Rating	3642 lbf 16200 N
Dynamic Load Rating	6250 lbf 27800 N

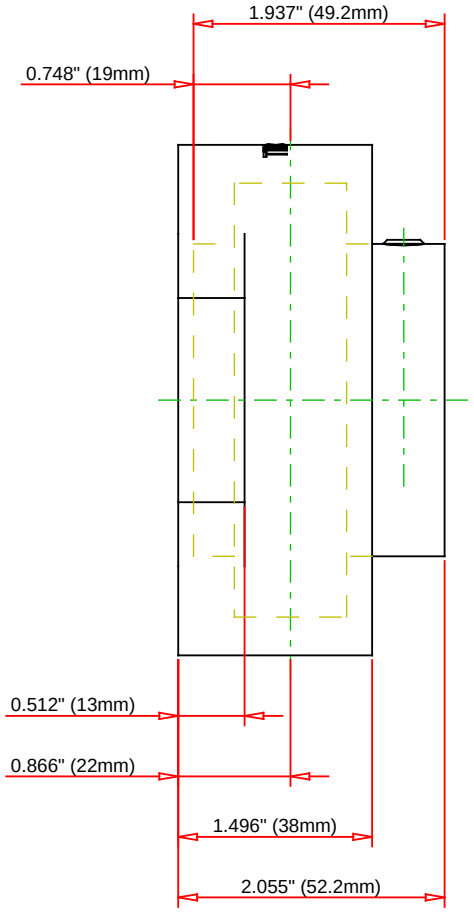

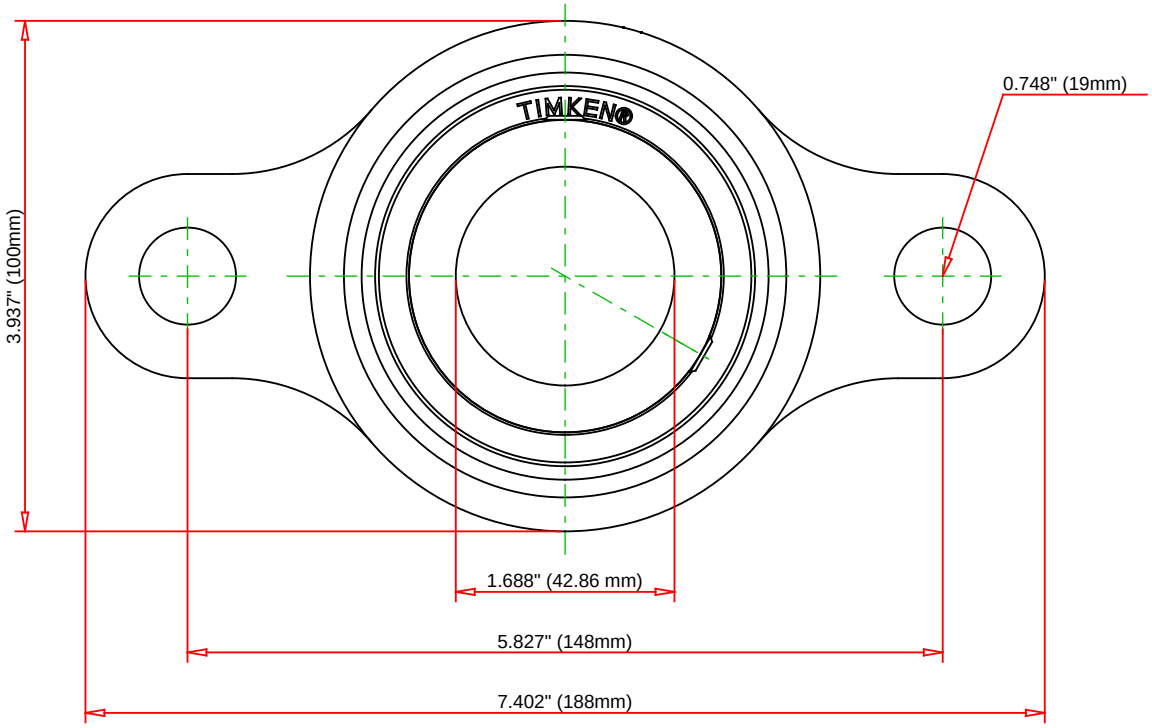

Bearing Number	SUC209-27-IP69K/F				
Load Ratings - C_r	6250	lbf	27800	N	
Load Ratings - C_{0r}	3642	lbf	16200	N	
Lubrication Type	Standard Food Safe Grease				
Housing Material	Cast Stainless Steel				

TIMKEN

THE TIMKEN COMPANY
NORTH CANTON, OHIO USA

SUCSFL209-27-IP69K/F

Corrosion-Resistant Two-Bolt Flanged Mounted Bearings - Set Screw Locking

Every reasonable effort has been made to ensure the accuracy of the information contained in this writing, but no liability is accepted for errors, omissions or for any other reason.

FOR DISCUSSION ONLY