The Timken Company
4500 Mt Pleasant St. NW
N. Canton, OH 44720
Phone: (234) 262-3000
E-Mail: CustomerCAD@timken.com • **Web site:** www.timken.com

Part Number SUCSFBQK209-27-IP69K/FVSL613, Corrosion-Resistant QuiKlean® Three-Bolt Flanged Mounted Bearings - Set Screw Locking



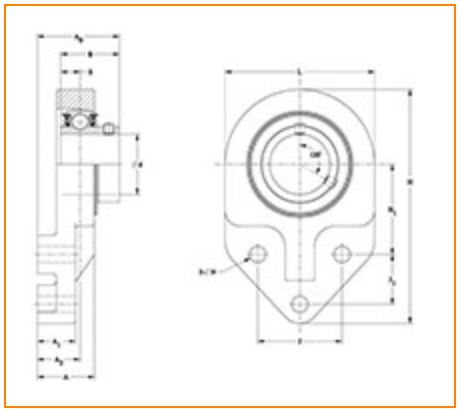

Specifications | Dimensions | Basic Load Ratings

Specifications

Bore Size	1 11/16 in
Seal Type	IP69K Seal
Housing Material	Cast Stainless Steel
Bearing Number	SUC209-27-IP69K/FVSL613
Lubrication Type	Food Grade Solid Lube
Locking Style	Set Screw Locking
Housing Construction	Three-Bolt Flange

Dimensions

Total Length L	4.250 in 108.0 mm
Total Height H	6.938 in 176.2 mm
Total Width A0	2.548 in 64.7 mm
Bolt Hole Spacing J	2.500 in 63.5 mm
Bolt Hole Size N	0.531 in 13.5 mm
Flange Thickness A1	1.000 in 25.4 mm
Housing Width A	2.000 in 50.8 mm
Dimension H1	2.750 in 69.9 mm
Dimension J1	1.500 in 38.1 mm
Center of Bearing from Housing End A2	1.359 in 34.5 mm
Center of Bearing from Bearing End S	0.748 in 19.0 mm
Inner Ring Width B	1.937 in 49.2 mm

Basic Load Ratings

Dynamic Load Rating[1]	6250 lbf 27800 N
Static Load Rating	3642 lbf 16200 N

[1] Based on 90×10^6 revolutions L_{10} life, for The Timken Company life calculation method. C_{90} and C_{a90} are radial and thrust values.

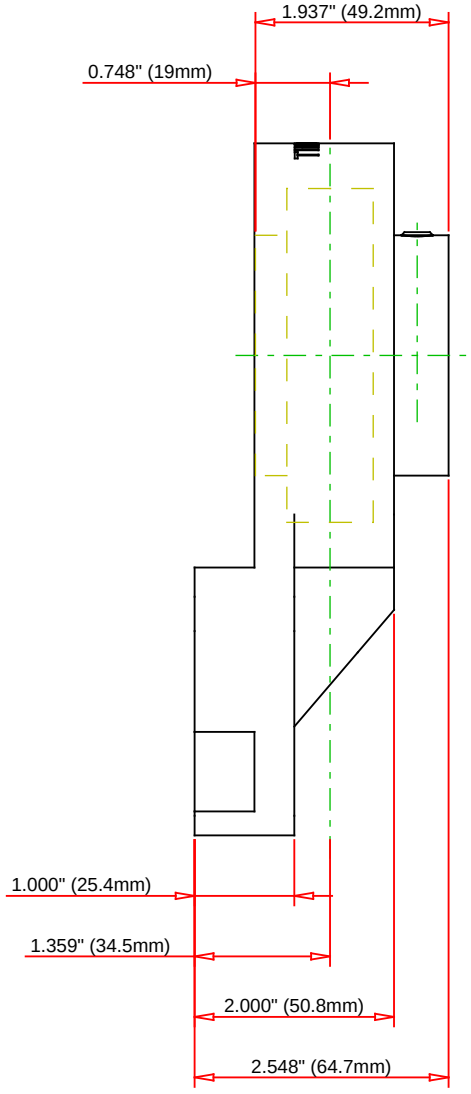

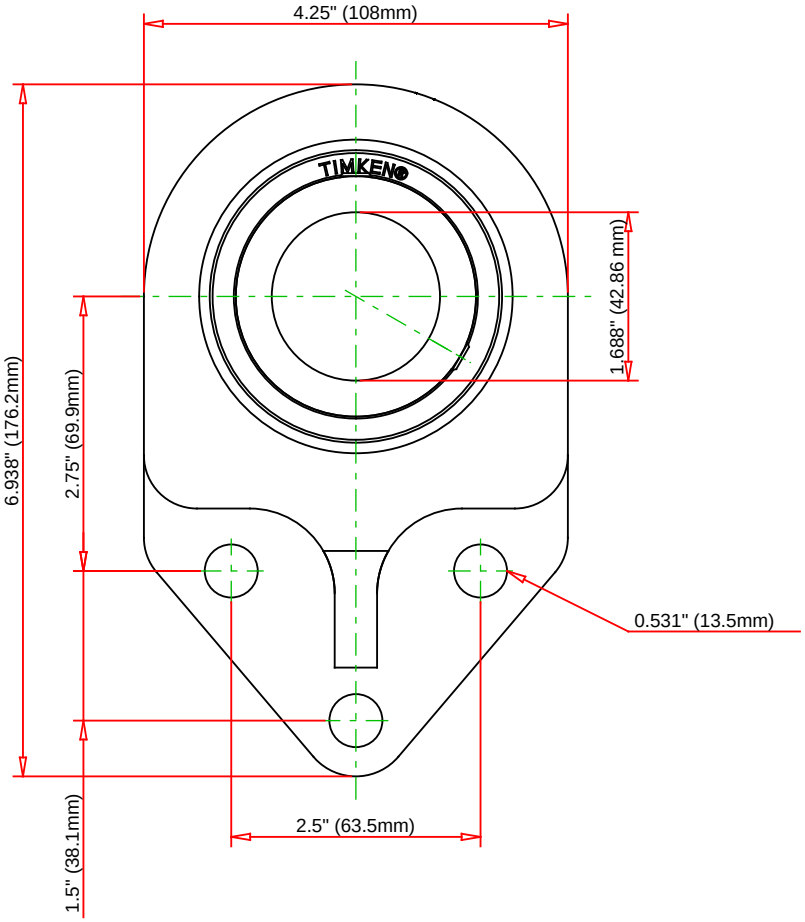

Bearing Number	SUC209-27-IP69K/FVSL613				
Load Ratings - C_r	6250	lbf	27800	N	
Load Ratings - C_{0r}	3642	lbf	16200	N	
Lubrication Type	Food Grade Solid Lube				
Housing Material	Cast Stainless Steel				

TIMKEN

THE TIMKEN COMPANY
NORTH CANTON, OHIO USA

SUCSFBQK209-27-IP69K/FVSL613

Corrosion-Resistant QuiKlean® Three-Bolt Flanged Mounted Bearings - Set Screw Locking

Every reasonable effort has been made to ensure the accuracy of the information contained in this writing, but no liability is accepted for errors, omissions or for any other reason.

FOR DISCUSSION ONLY