The Timken Company
4500 Mt Pleasant St. NW
N. Canton, OH 44720
Phone: (234) 262-3000
E-Mail: CustomerCAD@timken.com • **Web site:** www.timken.com

Part Number SUCSFBQK208-24-IP69K/F, Corrosion-Resistant QuiKlean® Three-Bolt Flanged Mounted Bearings - Set Screw Locking



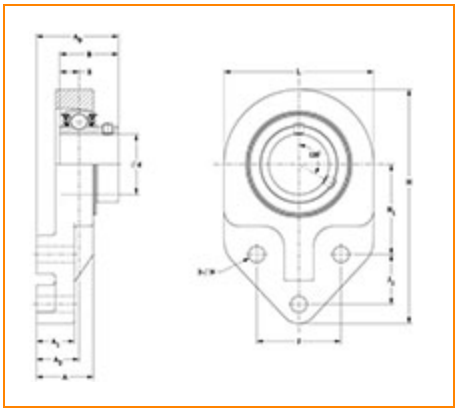

Specifications | Dimensions | Basic Load Ratings

Specifications

Bore Size	1 1/2 in
Seal Type	IP69K Seal
Housing Material	Cast Stainless Steel
Bearing Number	SUC208-24-IP69K/F
Lubrication Type	Standard Food Safe Grease
Locking Style	Set Screw Locking
Housing Construction	Three-Bolt Flange

Dimensions

Total Length L	4.000 in 101.6 mm
Total Height H	6.500 in 165.1 mm
Total Width A0	2.517 in 63.9 mm
Bolt Hole Spacing J	2.250 in 57.2 mm
Bolt Hole Size N	0.531 in 13.5 mm
Flange Thickness A1	1.000 in 25.4 mm
Housing Width A	1.906 in 48.4 mm
Dimension H1	2.563 in 65.0 mm
Dimension J1	1.375 in 35.1 mm
Center of Bearing from Housing End A2	1.328 in 33.7 mm
Center of Bearing from Bearing End S	0.748 in 19.0 mm
Inner Ring Width B	1.937 in 49.2 mm

Basic Load Ratings

Dynamic Load Rating[1]	5576 lbf 24800 N
Static Load Rating	3215 lbf 14300 N

[1] Based on 90×10^6 revolutions L_{10} life, for The Timken Company life calculation method. C_{90} and C_{a90} are radial and thrust values.

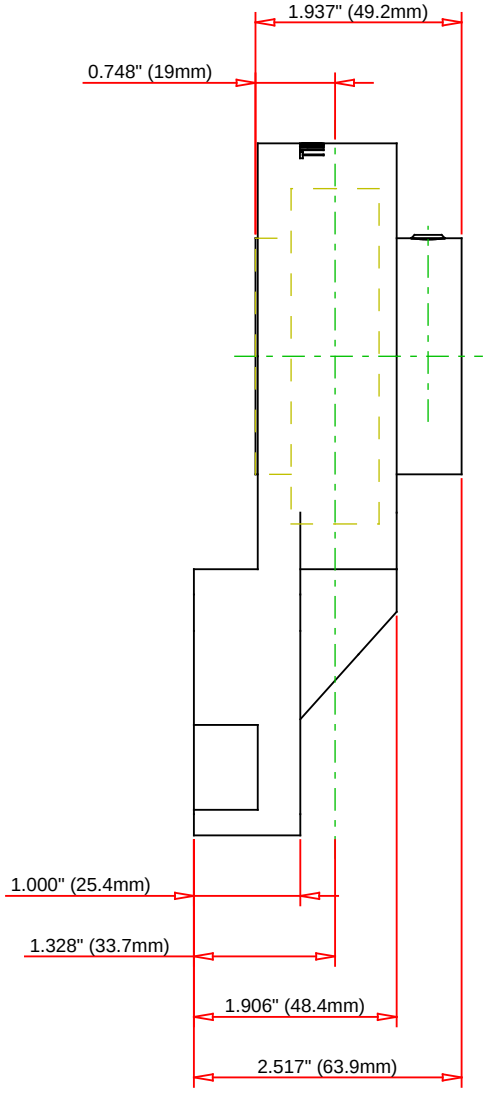

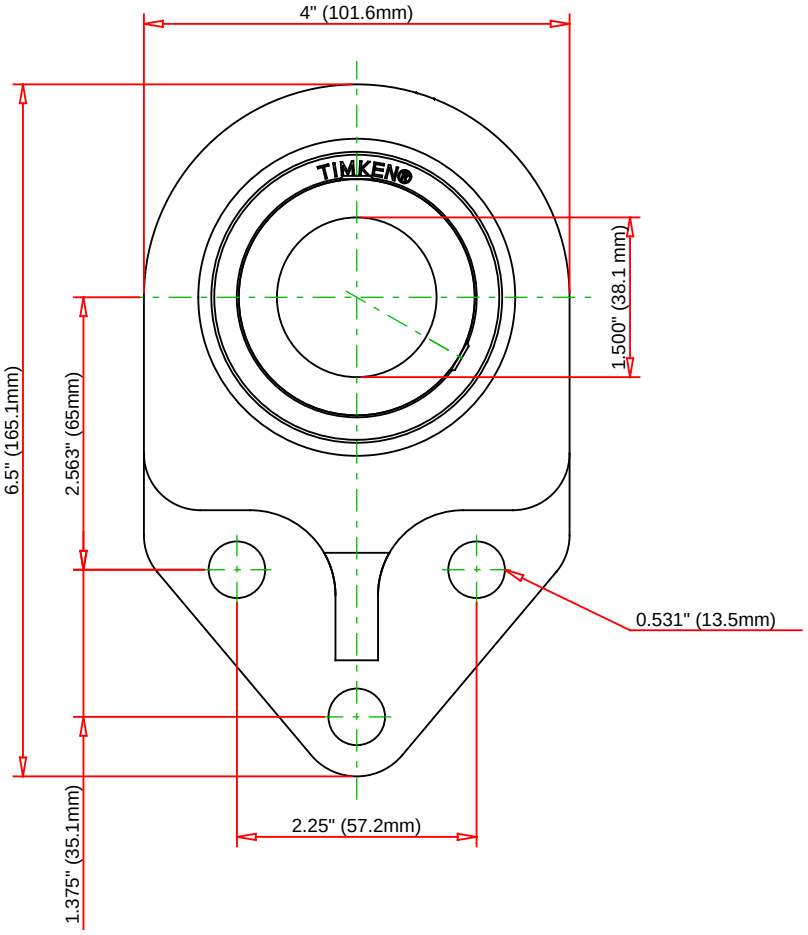

Bearing Number	SUC208-24-IP69K/F				
Load Ratings - C_r	5576	lbf	24800	N	
Load Ratings - C_{0r}	3215	lbf	14300	N	
Lubrication Type	Standard Food Safe Grease				
Housing Material	Cast Stainless Steel				

TIMKEN

THE TIMKEN COMPANY
NORTH CANTON, OHIO USA

SUCSFBQK208-24-IP69K/F

Corrosion-Resistant QuiKlean® Three-Bolt Flanged Mounted Bearings - Set Screw Locking

Every reasonable effort has been made to ensure the accuracy of the information contained in this writing, but no liability is accepted for errors, omissions or for any other reason.

FOR DISCUSSION ONLY