The Timken Company
4500 Mt Pleasant St. NW
N. Canton, OH 44720
Phone: (234) 262-3000
E-Mail: CustomerCAD@timken.com • **Web site:** www.timken.com

Part Number SUCSFBQK207-23-IP69K/F, Corrosion-Resistant QuiKlean® Three-Bolt Flanged Mounted Bearings - Set Screw Locking



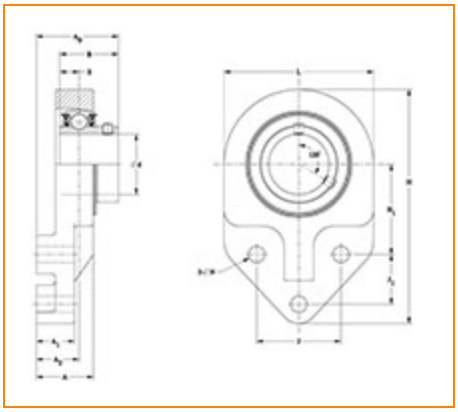

Specifications | Dimensions | Basic Load Ratings

Specifications

Bore Size	1 7/16 in
Seal Type	IP69K Seal
Housing Material	Cast Stainless Steel
Bearing Number	SUC207-23-IP69K/F
Lubrication Type	Standard Food Safe Grease
Locking Style	Set Screw Locking
Housing Construction	Three-Bolt Flange

Dimensions

Total Length L	3.625 in 92.1 mm
Total Height H	6.000 in 152.4 mm
Total Width A0	2.250 in 57.2 mm
Bolt Hole Spacing J	2.000 in 50.8 mm
Bolt Hole Size N	0.531 in 13.5 mm
Flange Thickness A1	1.000 in 25.4 mm
Housing Width A	1.844 in 46.8 mm
Dimension H1	2.375 in 60.5 mm
Dimension J1	1.250 in 31.8 mm
Center of Bearing from Housing End A2	1.250 in 31.8 mm
Center of Bearing from Bearing End S	0.689 in 17.5 mm
Inner Ring Width B	1.689 in 42.9 mm

Basic Load Ratings

Dynamic Load Rating[1]	4901 lbf 21800 N
Static Load Rating	2766 lbf 12300 N

[1] Based on 90×10^6 revolutions L_{10} life, for The Timken Company life calculation method. C_{90} and C_{a90} are radial and thrust values.

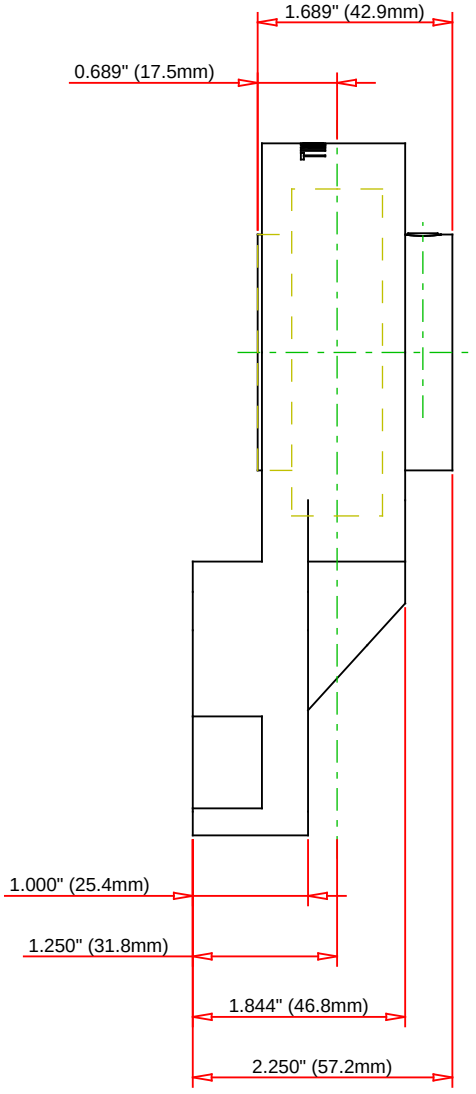

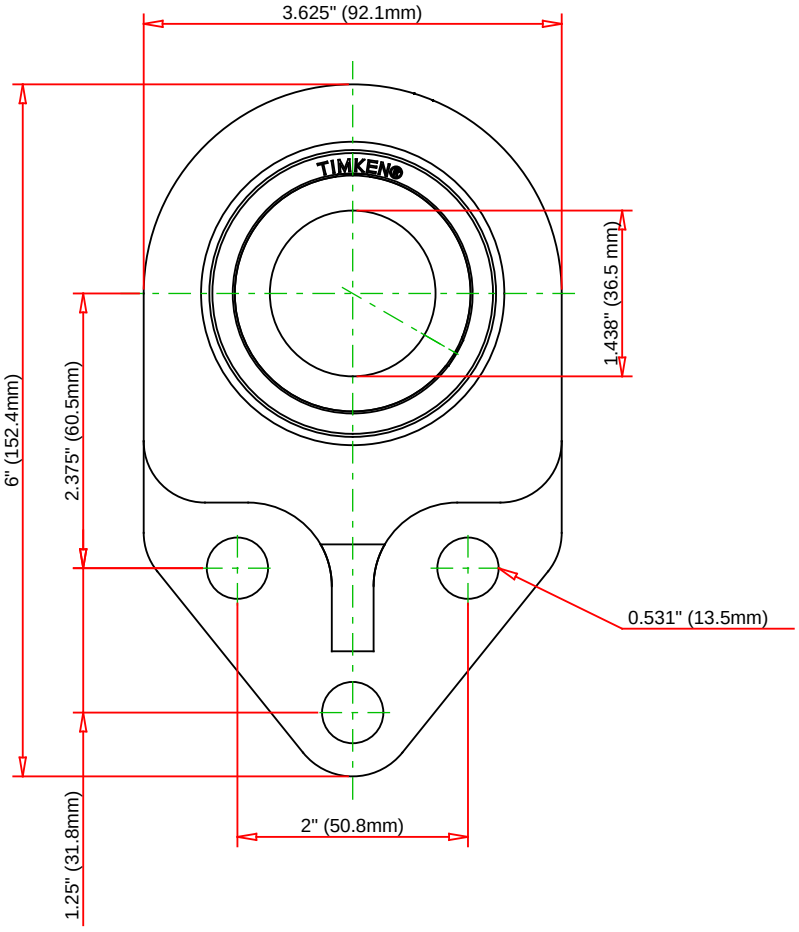

Bearing Number	SUC207-23-IP69K/F				
Load Ratings - C_r	4901	lbf	21800	N	
Load Ratings - C_{0r}	2766	lbf	12300	N	
Lubrication Type	Standard Food Safe Grease				
Housing Material	Cast Stainless Steel				

TIMKEN

THE TIMKEN COMPANY
NORTH CANTON, OHIO USA

SUCSFBQK207-23-IP69K/F

Corrosion-Resistant QuiKlean® Three-Bolt Flanged Mounted Bearings - Set Screw Locking

Every reasonable effort has been made to ensure the accuracy of the information contained in this writing, but no liability is accepted for errors, omissions or for any other reason.

FOR DISCUSSION ONLY