The Timken Company
4500 Mt Pleasant St. NW
N. Canton, OH 44720
Phone: (234) 262-3000
E-Mail: CustomerCAD@timken.com • **Web site:** www.timken.com

Part Number SUCSFBQK206-19-IP69K/F, Corrosion-Resistant QuiKlean® Three-Bolt Flanged Mounted Bearings - Set Screw Locking



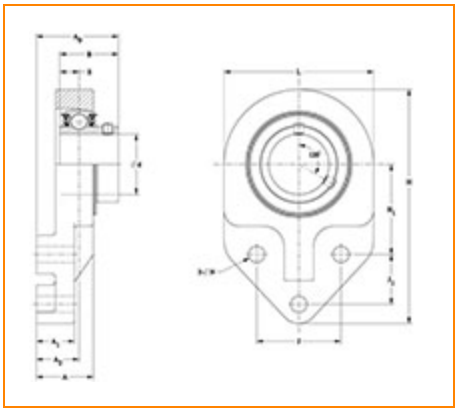

Specifications | Dimensions | Basic Load Ratings

Specifications

Bore Size	1 3/16 in
Seal Type	IP69K Seal
Housing Material	Cast Stainless Steel
Bearing Number	SUC206-19-IP69K/F
Lubrication Type	Standard Food Safe Grease
Locking Style	Set Screw Locking
Housing Construction	Three-Bolt Flange

Dimensions

Total Length L	3.125 in 79.4 mm
Total Height H	5.375 in 136.5 mm
Total Width A0	2.077 in 52.8 mm
Bolt Hole Spacing J	1.875 in 47.8 mm
Bolt Hole Size N	0.469 in 11.9 mm
Flange Thickness A1	0.875 in 22.2 mm
Housing Width A	1.719 in 43.7 mm
Dimension H1	2.063 in 52.4 mm
Dimension J1	1.250 in 31.8 mm
Center of Bearing from Housing End A2	1.203 in 30.6 mm
Center of Bearing from Bearing End S	0.626 in 15.9 mm
Inner Ring Width B	1.500 in 38.1 mm

Basic Load Ratings

Dynamic Load Rating[1]	3710 lbf 16500 N
Static Load Rating	2035 lbf 9050 N

[1] Based on 90×10^6 revolutions L_{10} life, for The Timken Company life calculation method. C_{90} and C_{a90} are radial and thrust values.

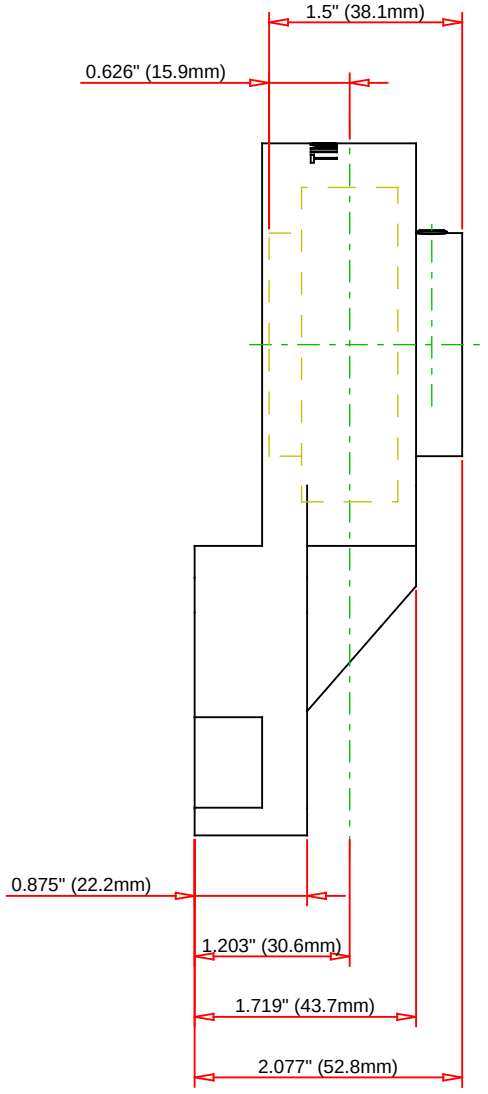

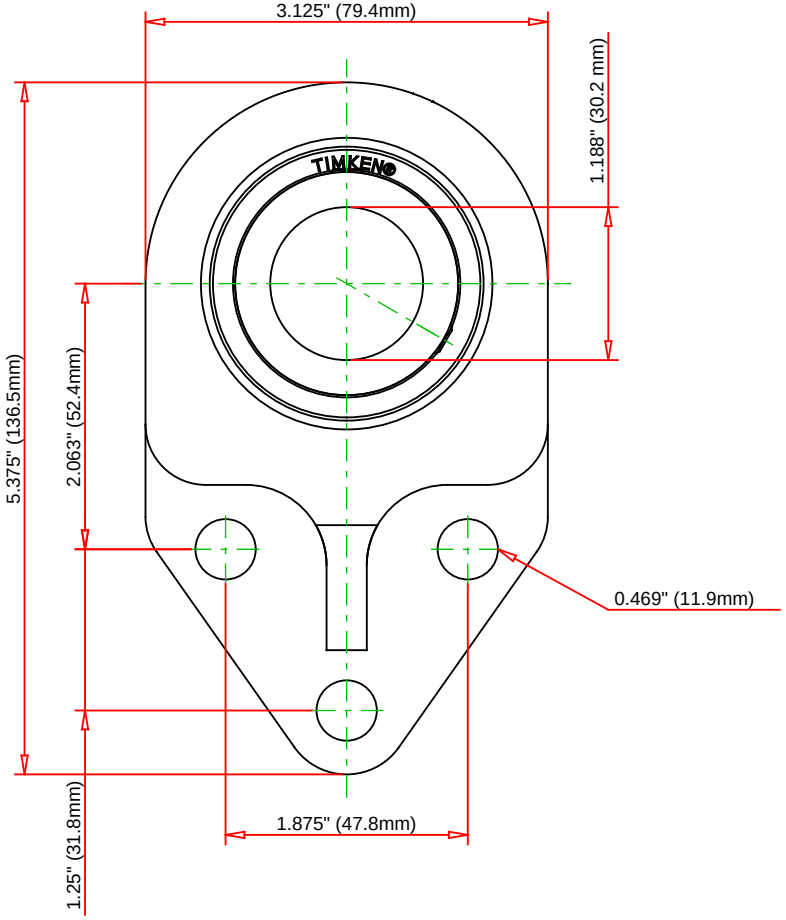

Bearing Number	SUC206-19-IP69K/F				
Load Ratings - C_r	3710	lbf	16500	N	
Load Ratings - C_{0r}	2035	lbf	9050	N	
Lubrication Type	Standard Food Safe Grease				
Housing Material	Cast Stainless Steel				

TIMKEN

THE TIMKEN COMPANY
NORTH CANTON, OHIO USA

SUCSFBQK206-19-IP69K/F

Corrosion-Resistant QuiKlean® Three-Bolt Flanged Mounted Bearings - Set Screw Locking

Every reasonable effort has been made to ensure the accuracy of the information contained in this writing, but no liability is accepted for errors, omissions or for any other reason.

FOR DISCUSSION ONLY