The Timken Company
4500 Mt Pleasant St. NW
N. Canton, OH 44720
Phone: (234) 262-3000
E-Mail: CustomerCAD@timken.com • **Web site:** www.timken.com

Part Number SUCSFBQK204-IP69K/FVSL613, Corrosion-Resistant QuiKlean® Three-Bolt Flanged Mounted Bearings - Set Screw Locking



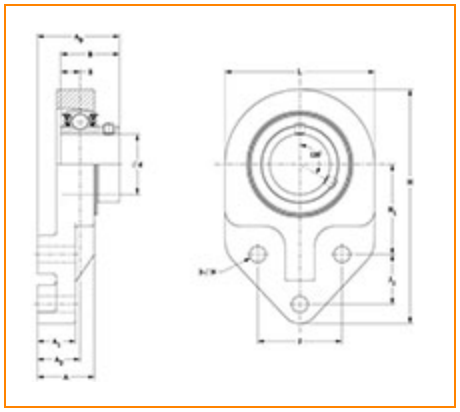

Specifications | Dimensions | Basic Load Ratings

Specifications

Bore Size	20 mm
Seal Type	IP69K Seal
Housing Material	Cast Stainless Steel
Bearing Number	SUC204-IP69K/FVSL613
Lubrication Type	Food Grade Solid Lube
Locking Style	Set Screw Locking
Housing Construction	Three-Bolt Flange

Dimensions

Total Length L	2.500 in 63.5 mm
Total Height H	4.250 in 108.0 mm
Total Width A0	1.814 in 46.1 mm
Bolt Hole Spacing J	1.500 in 38.1 mm
Bolt Hole Size N	0.406 in 10.3 mm
Flange Thickness A1	0.813 in 20.7 mm
Housing Width A	1.531 in 38.9 mm
Dimension H1	1.688 in 42.9 mm
Dimension J1	0.875 in 22.4 mm
Center of Bearing from Housing End A2	1.094 in 27.8 mm
Center of Bearing from Bearing End S	0.500 in 12.7 mm
Inner Ring Width B	1.220 in 31.0 mm

Basic Load Ratings

Dynamic Load Rating[1]	2451 lbf 10900 N
Static Load Rating	1203 lbf 5350 N

[1] Based on 90×10^6 revolutions L_{10} life, for The Timken Company life calculation method. C_{90} and C_{a90} are radial and thrust values.

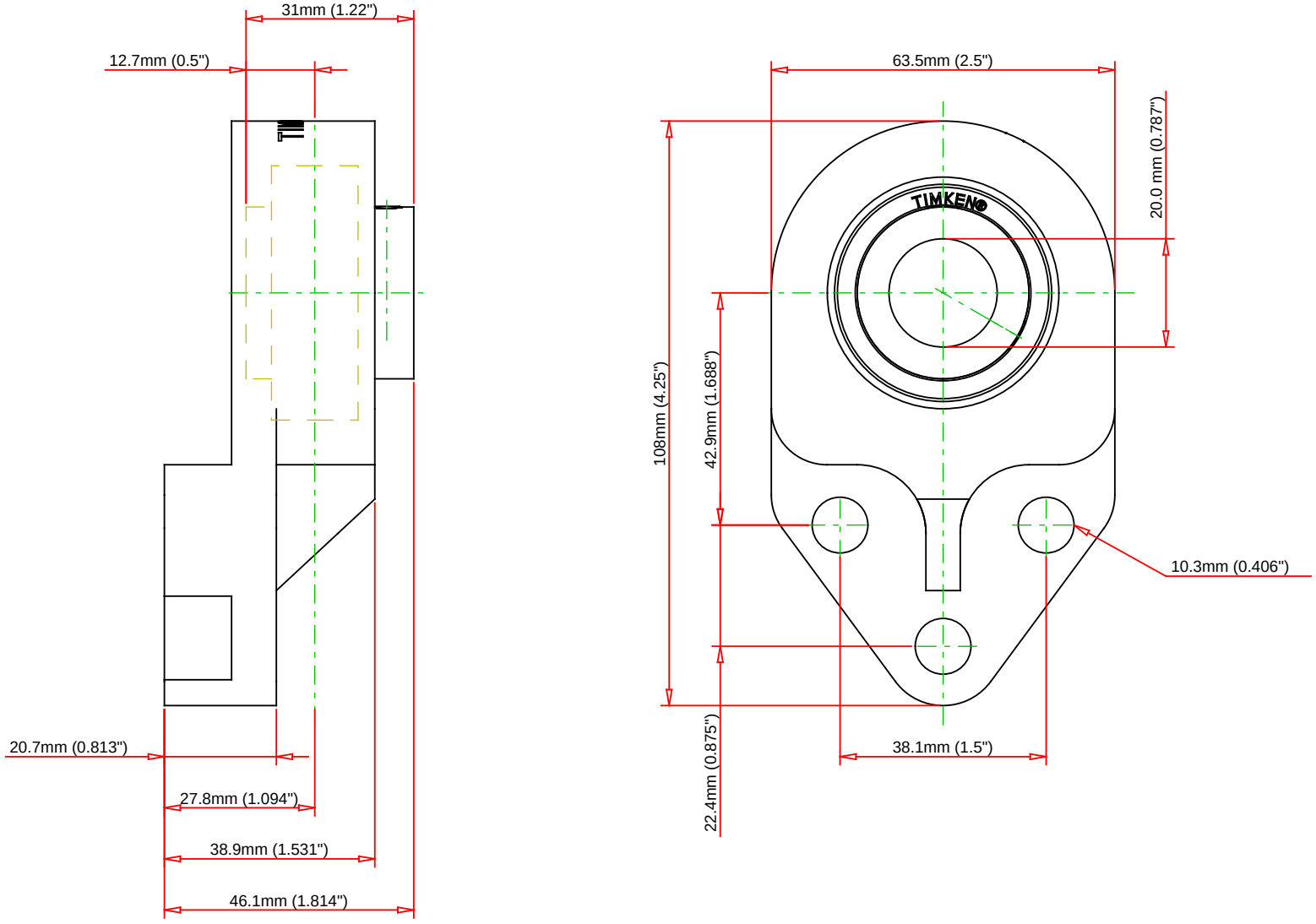

Bearing Number	SUC204-IP69K/FVSL613				
Load Ratings - C_r	2451	lbf	10900	N	
Load Ratings - C_{0r}	1203	lbf	5350	N	
Lubrication Type	Food Grade Solid Lube				
Housing Material	Cast Stainless Steel				

TIMKEN

THE TIMKEN COMPANY
NORTH CANTON, OHIO USA

SUCSFBQK204-IP69K/FVSL613

Corrosion-Resistant QuiKlean® Three-Bolt Flanged Mounted Bearings - Set Screw Locking

Every reasonable effort has been made to ensure the accuracy of the information contained in this writing, but no liability is accepted for errors, omissions or for any other reason.

FOR DISCUSSION ONLY