The Timken Company
4500 Mt Pleasant St. NW
N. Canton, OH 44720
Phone: (234) 262-3000
E-Mail: CustomerCAD@timken.com • **Web site:** www.timken.com

Part Number SUCSFLY205-IP69K/FVSL613, Corrosion-Resistant Two-Bolt Flanged Mounted Bearings - Set Screw Locking



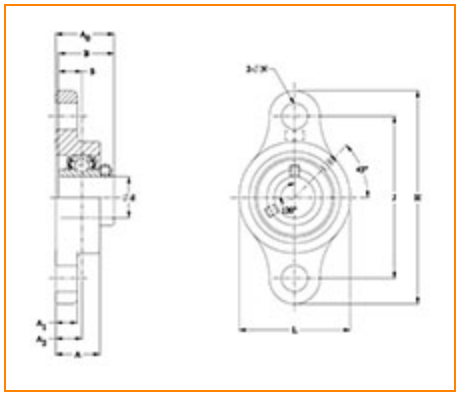

Specifications | Dimensions | Basic Load Ratings

Specifications

Bore Size	25 mm
Seal Type	IP69K Seal
Housing Material	Cast Stainless Steel
Bearing Number	SUC205-IP69K/FVSL613
Lubrication Type	Food Grade Solid Lube
Locking Style	Set Screw Locking
Housing Construction	Two-Bolt Flange
Bearing Style	Ball Bearing

Dimensions

Total Length H	5.118 in 130.0 mm
Total Height L	2.677 in 68.0 mm
Total Width A0	1.410 in 35.8 mm
Bolt Hole Spacing J	3.898 in 99.0 mm
Housing Width A	1.083 in 27.5 mm
Bolt Hole Size N	0.630 in 16.0 mm
Center of Bearing from Housing End A2	0.630 in 16.0 mm
Center of Bearing from Bearing End S	0.563 in 14.3 mm
Inner Ring Width B	1.343 in 34.1 mm

Basic Load Ratings

Static Load Rating	1417 lbf 6300 N
Dynamic Load Rating	2676 lbf 11900 N

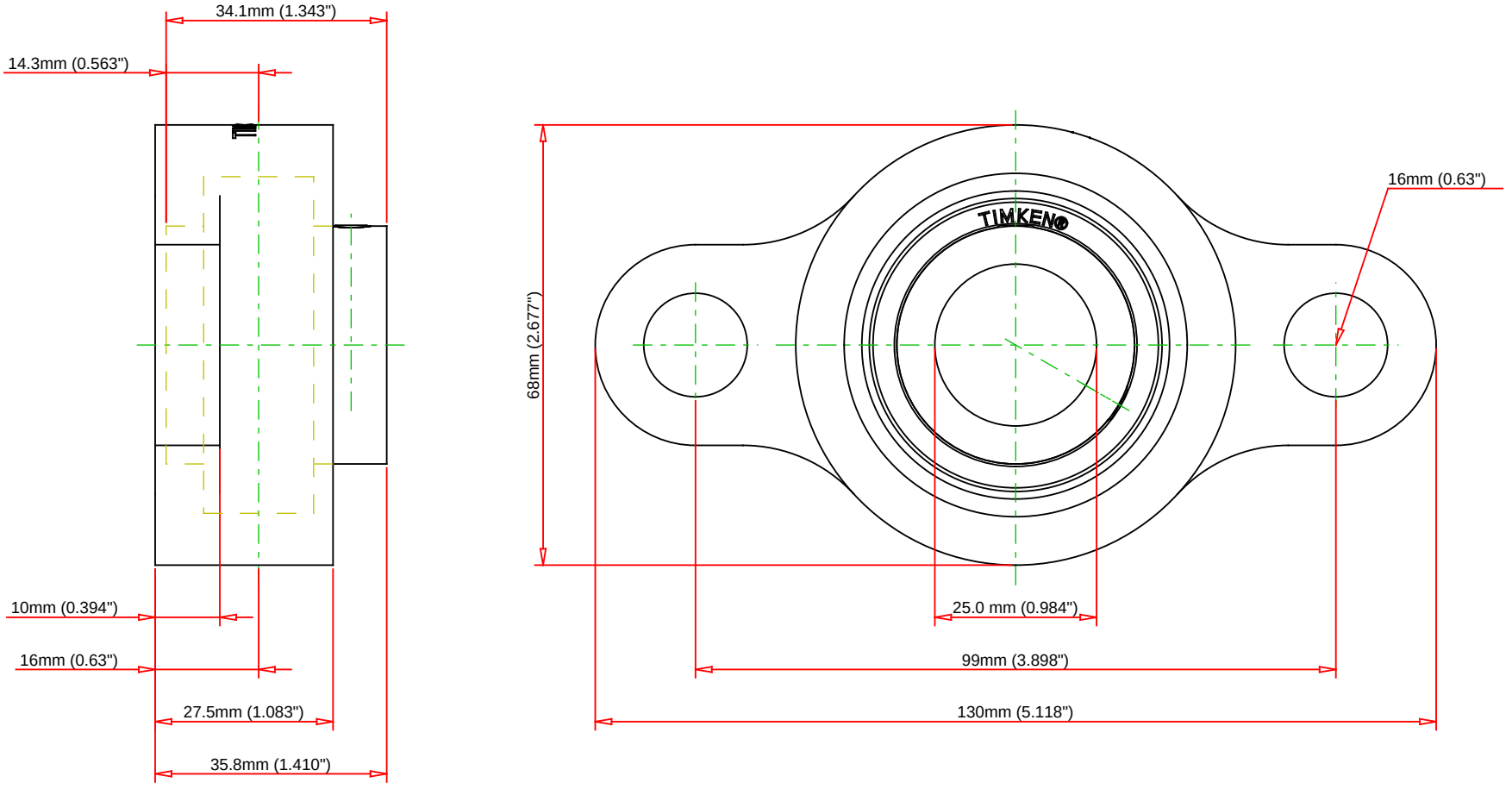

Bearing Number	SUC205-IP69K/FVSL613				
Load Ratings - C_r	2676	lbf	11900	N	
Load Ratings - C_{0r}	1417	lbf	6300	N	
Lubrication Type	Food Grade Solid Lube				
Housing Material	Cast Stainless Steel				

TIMKEN

THE TIMKEN COMPANY
NORTH CANTON, OHIO USA

SUCSFLY205-IP69K/FVSL613

Corrosion-Resistant Two-Bolt Flanged Mounted Bearings - Set Screw Locking

Every reasonable effort has been made to ensure the accuracy of the information contained in this writing, but no liability is accepted for errors, omissions or for any other reason.

FOR DISCUSSION ONLY