The Timken Company
4500 Mt Pleasant St. NW
N. Canton, OH 44720
Phone: (234) 262-3000
E-Mail: CustomerCAD@timken.com • **Web site:** www.timken.com

Part Number SUCSFLY204-12-IP69K/F, Corrosion-Resistant Two-Bolt Flanged Mounted Bearings - Set Screw Locking



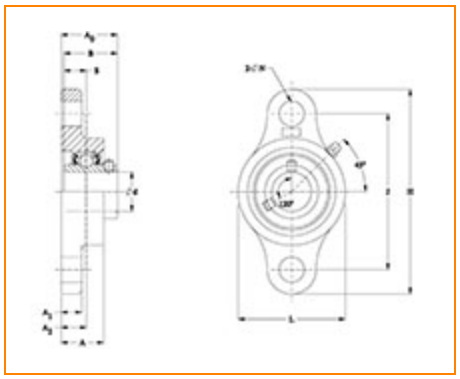

Specifications | Dimensions | Basic Load Ratings

Specifications

Bore Size	0.7500 in
Seal Type	IP69K Seal
Housing Material	Cast Stainless Steel
Bearing Number	SUC204-12-IP69K/F
Lubrication Type	Standard Food Safe Grease
Locking Style	Set Screw Locking
Housing Construction	Two-Bolt Flange
Bearing Style	Ball Bearing

Dimensions

Total Length H	4.449 in 113.0 mm
Total Height L	2.362 in 60.0 mm
Total Width A0	1.311 in 33.3 mm
Bolt Hole Spacing J	3.543 in 90.0 mm
Housing Width A	1.024 in 26.0 mm
Bolt Hole Size N	0.472 in 12.0 mm
Center of Bearing from Housing End A2	0.591 in 15.0 mm
Center of Bearing from Bearing End S	0.500 in 12.7 mm
Inner Ring Width B	1.220 in 31.0 mm

Basic Load Ratings

Static Load Rating	1203 lbf 5350 N
Dynamic Load Rating	2451 lbf 10900 N

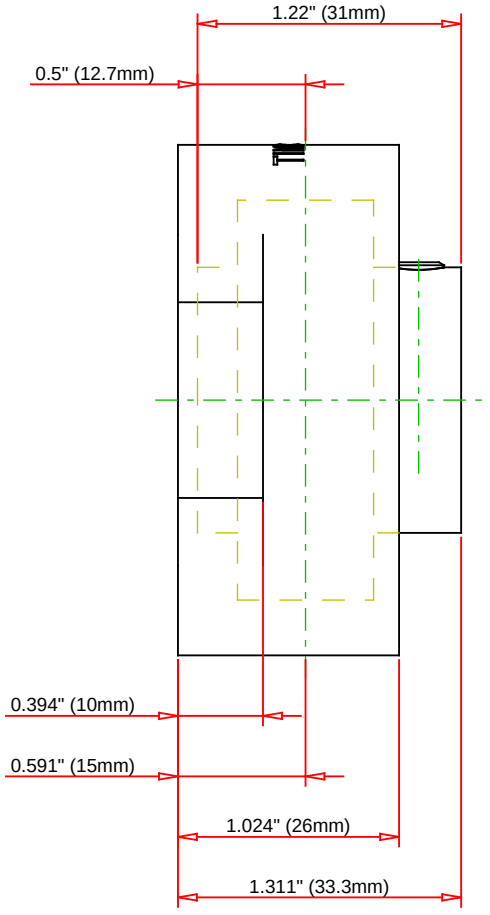

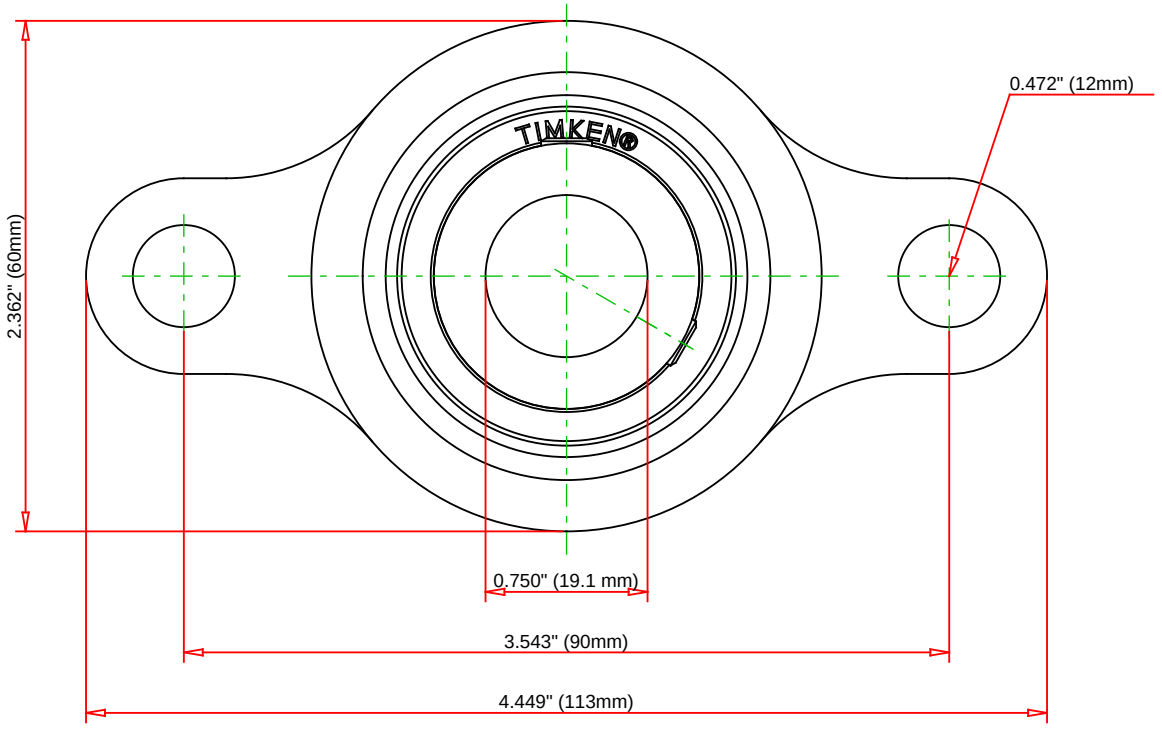

Bearing Number	SUC204-12-IP69K/F				
Load Ratings - C_r	2451	lbf	10900	N	
Load Ratings - C_{0r}	1203	lbf	5350	N	
Lubrication Type	Standard Food Safe Grease				
Housing Material	Cast Stainless Steel				

TIMKEN

THE TIMKEN COMPANY
NORTH CANTON, OHIO USA

SUCSFLY204-12-IP69K/F

Corrosion-Resistant Two-Bolt Flanged Mounted Bearings - Set Screw Locking

Every reasonable effort has been made to ensure the accuracy of the information contained in this writing, but no liability is accepted for errors, omissions or for any other reason.

FOR DISCUSSION ONLY