The Timken Company
4500 Mt Pleasant St. NW
N. Canton, OH 44720
Phone: (234) 262-3000
E-Mail: CustomerCAD@timken.com • **Web site:** www.timken.com

Part Number SUCSFLSQK207-23-IP69K/FVSL613, Corrosion-Resistant QuiKlean® Two-Bolt Flanged Mounted Bearings - Set Screw Locking



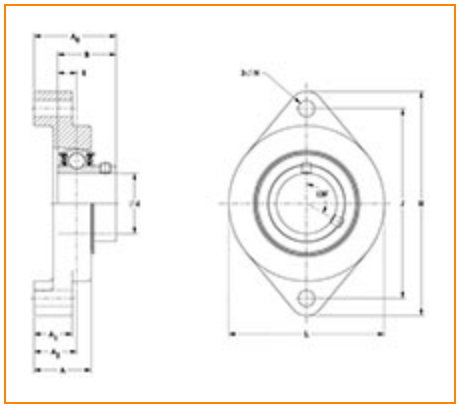

Specifications | Basic Load Ratings | Dimensions

Specifications

Bore Size	1 7/16 in
Seal Type	IP69K Seal
Housing Material	Cast Stainless Steel
Bearing Number	SUC207-23-IP69K/FVSL613
Lubrication Type	Food Grade Solid Lube
Locking Style	Set Screw Locking
Housing Construction	Two-Bolt Flange
Bearing Style	Ball Bearing

Basic Load Ratings

Dynamic Load Rating[1]	4901 lbf 21800 N
Static Load Rating	2766 lbf 12300 N

Dimensions

Total Length H	4.938 in 125.4 mm
Total Height L	3.500 in 88.9 mm
Total Width A0	2.250 in 57.2 mm
Bolt Hole Spacing J	3.938 in 100.0 mm
Base Thickness A1	1.000 in 25.4 mm
Housing Width A	1.840 in 46.7 mm
Bolt Hole Size N	0.406 in 10.3 mm
Center of Bearing from Housing End A2	1.25 in 31.8 mm
Center of Bearing from Bearing End S	0.689 in 17.5 mm
Inner Ring Width B	1.689 in 42.9 mm

[1] Based on 90×10^6 revolutions L_{10} life, for The Timken Company life calculation method. C_{90} and C_{a90} are radial and thrust values.

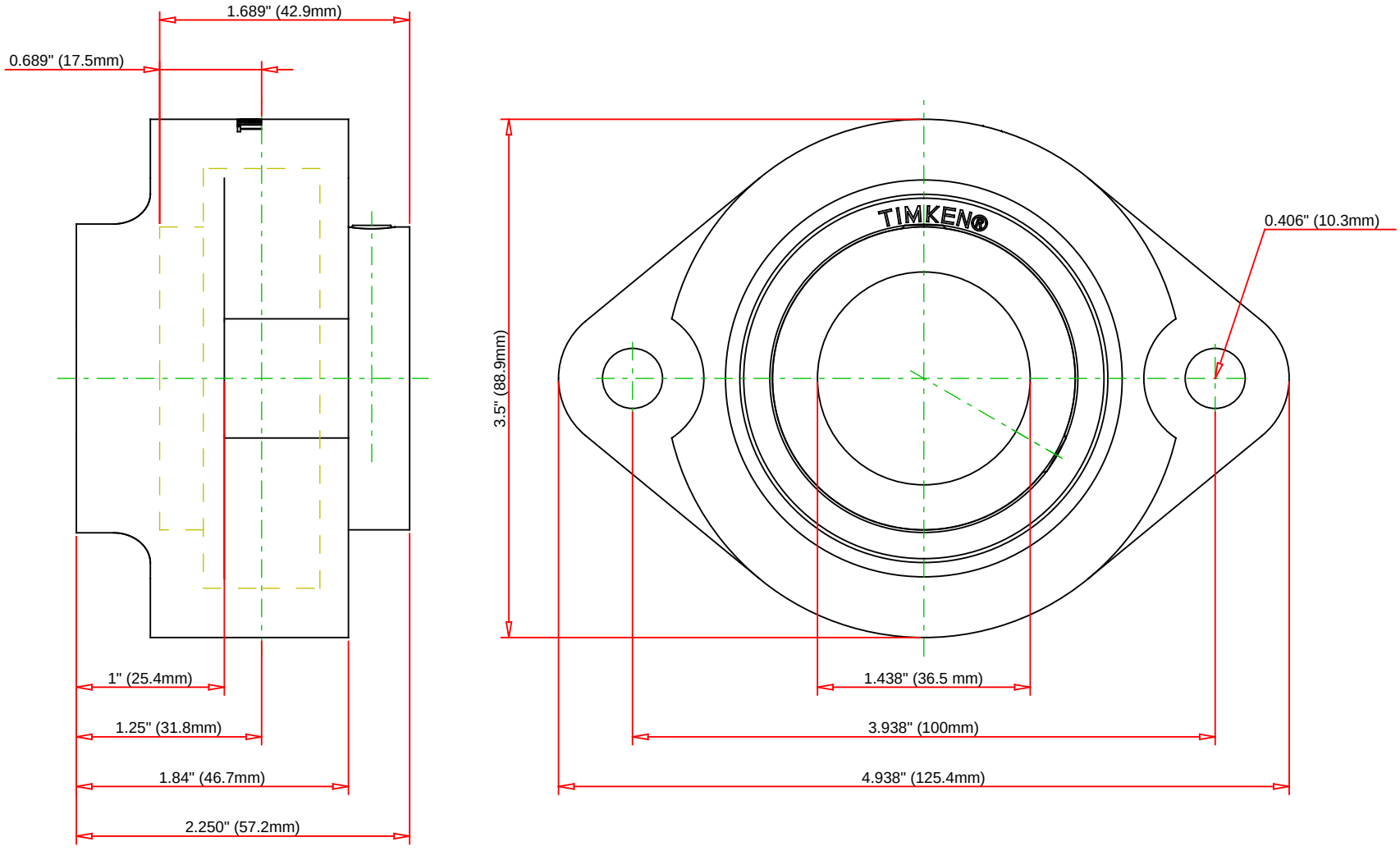

Bearing Number	SUC207-23-IP69K/FVSL613				
Load Ratings - C_r	4901	lbf	21800	N	
Load Ratings - C_{0r}	2766	lbf	12300	N	
Lubrication Type	Food Grade Solid Lube				
Housing Material	Cast Stainless Steel				

TIMKEN

THE TIMKEN COMPANY
NORTH CANTON, OHIO USA

SUCSFLSQK207-23-IP69K/FVSL613

Corrosion-Resistant QuiKlean® Two-Bolt Flanged Mounted Bearings - Set Screw Locking

Every reasonable effort has been made to ensure the accuracy of the information contained in this writing, but no liability is accepted for errors, omissions or for any other reason.

FOR DISCUSSION ONLY