The Timken Company
4500 Mt Pleasant St. NW
N. Canton, OH 44720
Phone: (234) 262-3000
E-Mail: CustomerCAD@timken.com • **Web site:** www.timken.com

Part Number SUCSTBYM206-19-IP69K/F, Corrosion-Resistant Tapped Base Mounted Bearings - Set Screw Locking



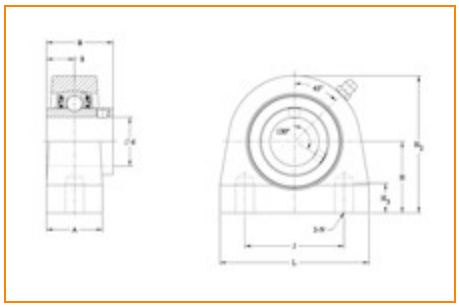

Specifications | Dimensions | Basic Load Ratings

Specifications

Bore Size	1 3/16 in
Seal Type	IP69K Seal
Housing Material	Cast Stainless Steel
Bearing Number	SUC206-19-IP69K/F
Lubrication Type	Standard Food Safe Grease
Locking Style	Set Screw Locking
Housing Construction	Tapped Base
Bearing Style	Ball Bearing

Dimensions

Housing Width A	1.470 in 37.3 mm
Total Length L	4.000 in 101.6 mm
Total Height H2	3.250 in 82.6 mm
Thread Length H3	0.709 in 18.0 mm
Bolt Hole Spacing J	3.000 in 76.2 mm
Dimension L1	0.000 in 0.0 mm
Base to Center Height H	1.688 in 42.9 mm
Foot Height H1	0.000 in 0.0 mm
Center of Bearing from Bearing End S	0.626 in 15.9 mm
Inner Ring Width B	1.500 in 38.1 mm

Basic Load Ratings

Dynamic Load Rating[1]	3710 lbf 16500 N
Static Load Rating	2035 lbf 9050 N

[1] Based on 90 x 10^6 revolutions L_{10} life, for The Timken Company life calculation method. C_{90} and C_{a90} are radial and thrust values.

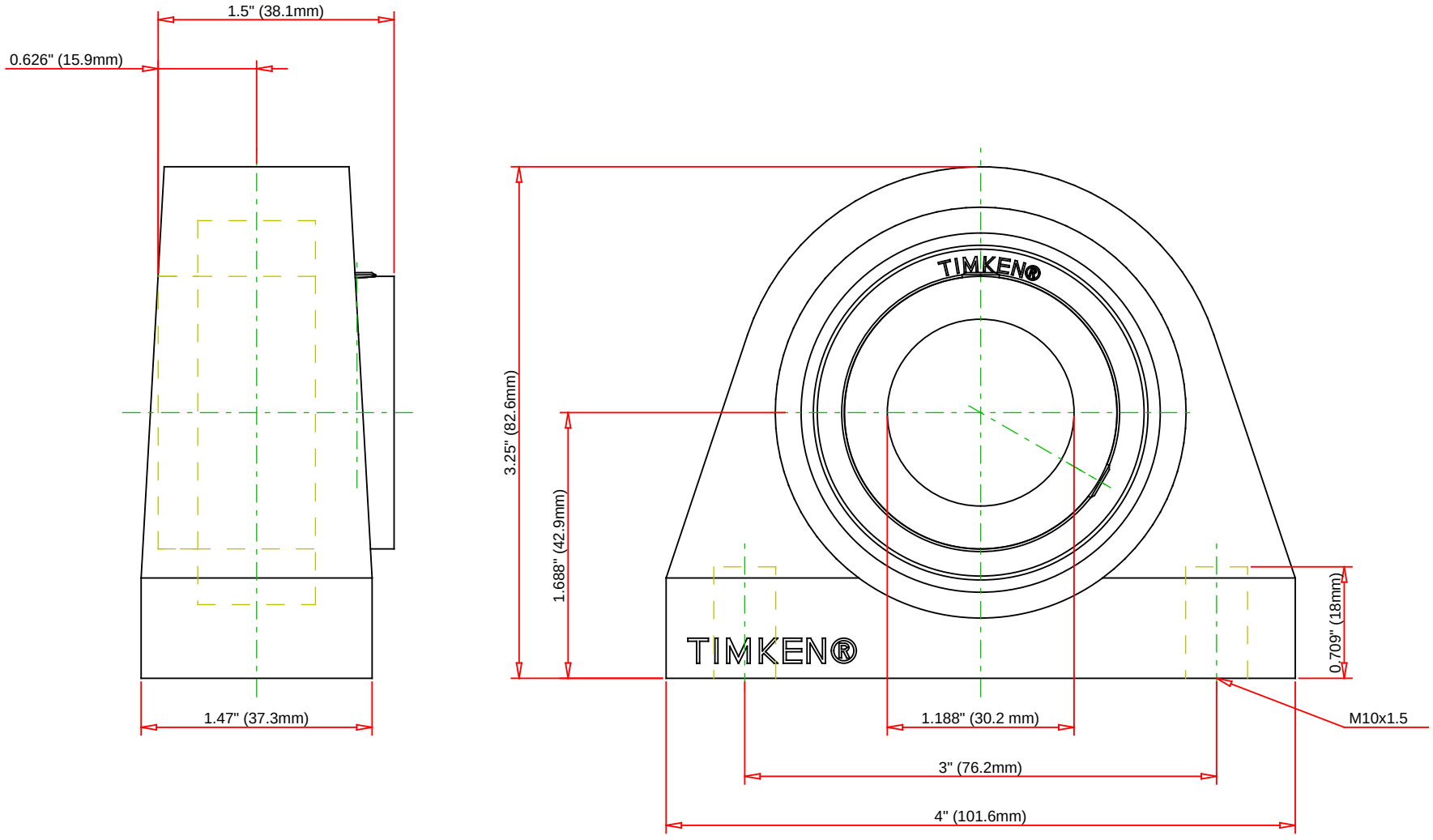

Bearing Number	SUC206-19-IP69K/F				
Load Ratings - C_r	3710	lbf	16500	N	
Load Ratings - C_{0r}	2035	lbf	9050	N	
Lubrication Type	Standard Food Safe Grease				
Housing Material	Cast Stainless Steel				

TIMKEN

THE TIMKEN COMPANY
NORTH CANTON, OHIO USA

SUCSTBYM206-19-IP69K/F

Corrosion-Resistant Tapped Base Mounted Bearings - Set Screw Locking

Every reasonable effort has been made to ensure the accuracy of the information contained in this writing, but no liability is accepted for errors, omissions or for any other reason.

FOR DISCUSSION ONLY