The Timken Company
4500 Mt Pleasant St. NW
N. Canton, OH 44720
Phone: (234) 262-3000
E-Mail: CustomerCAD@timken.com • **Web site:** www.timken.com

Part Number SUCSF206-20-IP69K/FVSL613, Corrosion-Resistant Four-Bolt Flanged Mounted Bearings - Set Screw Locking



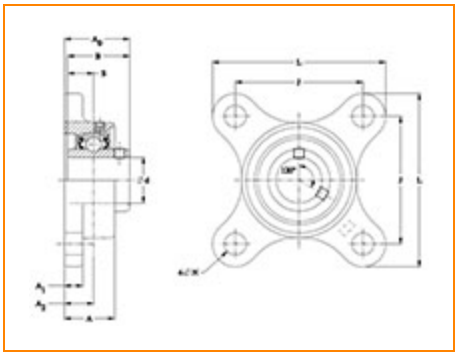

Specifications | Dimensions | Basic Load Ratings

Specifications

Bore Size	1 1/4 in
Seal Type	IP69K Seal
Housing Material	Cast Stainless Steel
Lubrication Type	Food Grade Solid Lube
Bearing Number	SUC206-20-IP69K/FVSL613
Locking Style	Set Screw Locking
Housing Construction	Four-Bolt Square Flange
Bearing Style	Ball Bearing

Dimensions

Total Length L	4.252 in 108.0 mm
Total Width A0	1.583 in 40.2 mm
Total Height L	4.252 in 108.0 mm
Bolt Hole Spacing J	3.268 in 83.0 mm
Housing Width A	1.220 in 31.0 mm
Bolt Hole Size N	0.472 in 12.0 mm
Center of Bearing from Housing End A2	0.709 in 18.0 mm
Center of Bearing from Bearing End S	0.626 in 15.9 mm
Inner Ring Width B	1.500 in 38.1 mm

Basic Load Ratings

Dynamic Load Rating[1]	3710 lbf 16500 N
Static Load Rating	2035 lbf 9050 N

[1] Based on 90×10^6 revolutions L_{10} life, for The Timken Company life calculation method. C_{90} and C_{a90} are radial and thrust values.

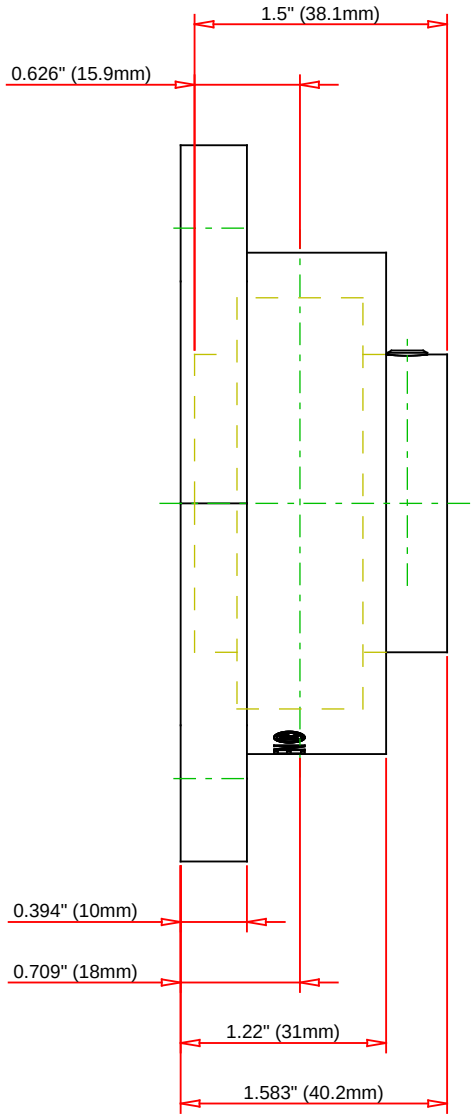

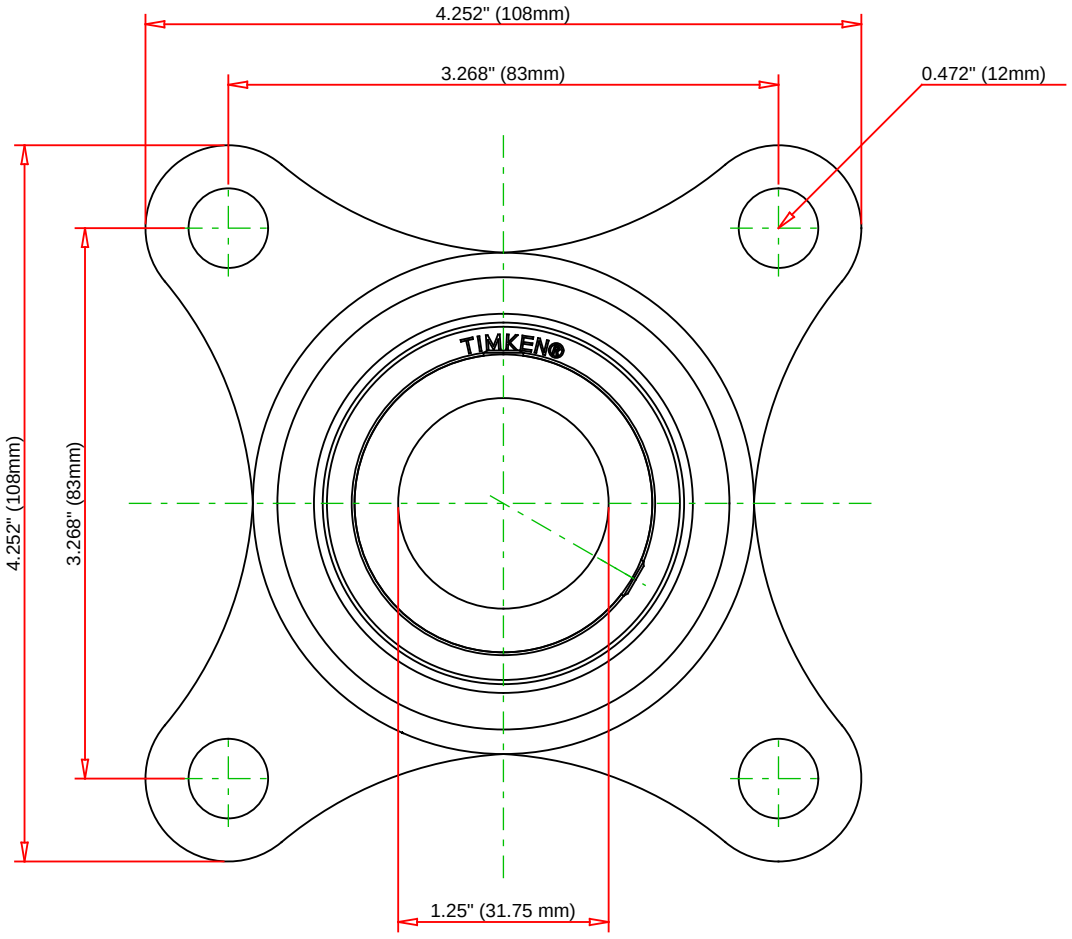

Bearing Number	SUC206-20-IP69K/FVSL613				
Load Ratings - C_r	3710	lbf	16500	N	
Load Ratings - C_{0r}	2035	lbf	9050	N	
Lubrication Type	Food Grade Solid Lube				
Housing Material	Cast Stainless Steel				

TIMKEN

THE TIMKEN COMPANY
NORTH CANTON, OHIO USA

SUCSF206-20-IP69K/FVSL613

Corrosion-Resistant Four-Bolt Flanged Mounted Bearings - Set Screw Locking

Every reasonable effort has been made to ensure the accuracy of the information contained in this writing, but no liability is accepted for errors, omissions or for any other reason.

FOR DISCUSSION ONLY