The Timken Company
4500 Mt Pleasant St. NW
N. Canton, OH 44720
Phone: (234) 262-3000
E-Mail: CustomerCAD@timken.com • **Web site:** www.timken.com

Part Number SUCSTBYM205-IP69K/FVSL613, Corrosion-Resistant Tapped Base Mounted Bearings - Set Screw Locking



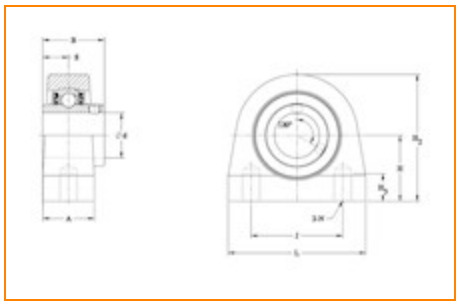

Specifications | Dimensions | Basic Load Ratings

Specifications

Bore Size	25 mm
Seal Type	IP69K Seal
Housing Material	Cast Stainless Steel
Bearing Number	SUC205-IP69K/FVSL613
Lubrication Type	Food Grade Solid Lube
Locking Style	Set Screw Locking
Housing Construction	Tapped Base
Bearing Style	Ball Bearing

Dimensions

Housing Width A	1.125 in 28.6 mm
Total Length L	3.000 in 76.2 mm
Total Height H2	2.768 in 70.3 mm
Thread Length H3	0.709 in 18.0 mm
Bolt Hole Spacing J	2.000 in 50.8 mm
Dimension L1	0.000 in 0.0 mm
Base to Center Height H	1.438 in 36.6 mm
Foot Height H1	0.000 in 0.0 mm
Center of Bearing from Bearing End S	0.563 in 14.3 mm
Inner Ring Width B	1.343 in 34.1 mm

Basic Load Ratings

Dynamic Load Rating[1]	2676 lbf 11900 N
Static Load Rating	1417 lbf 6300 N

[1] Based on 90 x 10^6 revolutions L_{10} life, for The Timken Company life calculation method. C_{90} and C_{a90} are radial and thrust values.

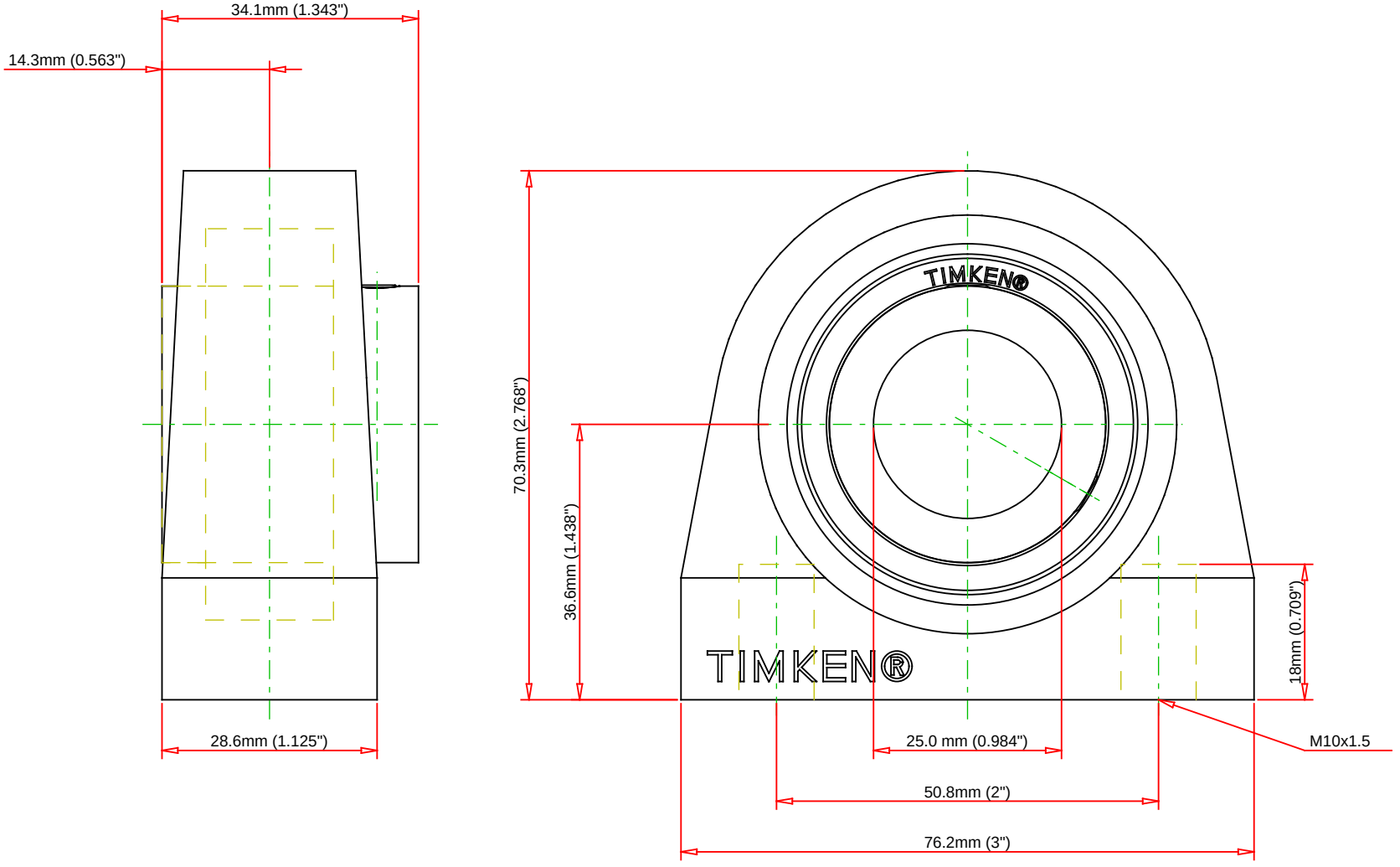

Bearing Number	SUC205-IP69K/FVSL613				
Load Ratings - C_r	2676	lbf	11900	N	
Load Ratings - C_{0r}	1417	lbf	6300	N	
Lubrication Type	Food Grade Solid Lube				
Housing Material	Cast Stainless Steel				

TIMKEN®

THE TIMKEN COMPANY
NORTH CANTON, OHIO USA

SUCSTBYM205-IP69K/FVSL613

Corrosion-Resistant Tapped Base Mounted Bearings - Set Screw Locking

Every reasonable effort has been made to ensure the accuracy of the information contained in this writing, but no liability is accepted for errors, omissions or for any other reason.

FOR DISCUSSION ONLY