The Timken Company
4500 Mt Pleasant St. NW
N. Canton, OH 44720
Phone: (234) 262-3000
E-Mail: CustomerCAD@timken.com • **Web site:** www.timken.com

Part Number SUCSTBYM204-12-IP69K/F, Corrosion-Resistant Tapped Base Mounted Bearings - Set Screw Locking



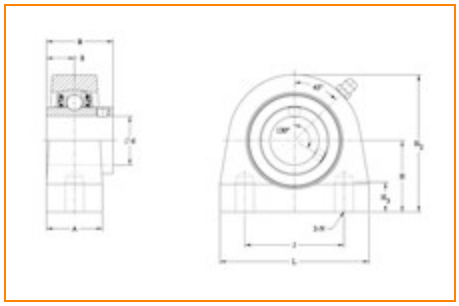

Specifications | Dimensions | Basic Load Ratings

Specifications

Bore Size	0.7500 in
Seal Type	IP69K Seal
Housing Material	Cast Stainless Steel
Bearing Number	SUC204-12-IP69K/F
Lubrication Type	Standard Food Safe Grease
Locking Style	Set Screw Locking
Housing Construction	Tapped Base
Bearing Style	Ball Bearing

Dimensions

Housing Width A	1.142 in 29.0 mm
Total Length L	2.880 in 73.2 mm
Total Height H2	2.523 in 64.1 mm
Thread Length H3	0.591 in 15.0 mm
Bolt Hole Spacing J	2.000 in 50.8 mm
Dimension L1	0.000 in 0.0 mm
Base to Center Height H	1.313 in 33.3 mm
Foot Height H1	0.000 in 0.0 mm
Center of Bearing from Bearing End S	0.500 in 12.7 mm
Inner Ring Width B	1.220 in 31.0 mm

Basic Load Ratings

Dynamic Load Rating[1]	2451 lbf 10900 N
Static Load Rating	1203 lbf 5350 N

[1] Based on 90 x 10^6 revolutions L_{10} life, for The Timken Company life calculation method. C_{90} and C_{a90} are radial and thrust values.

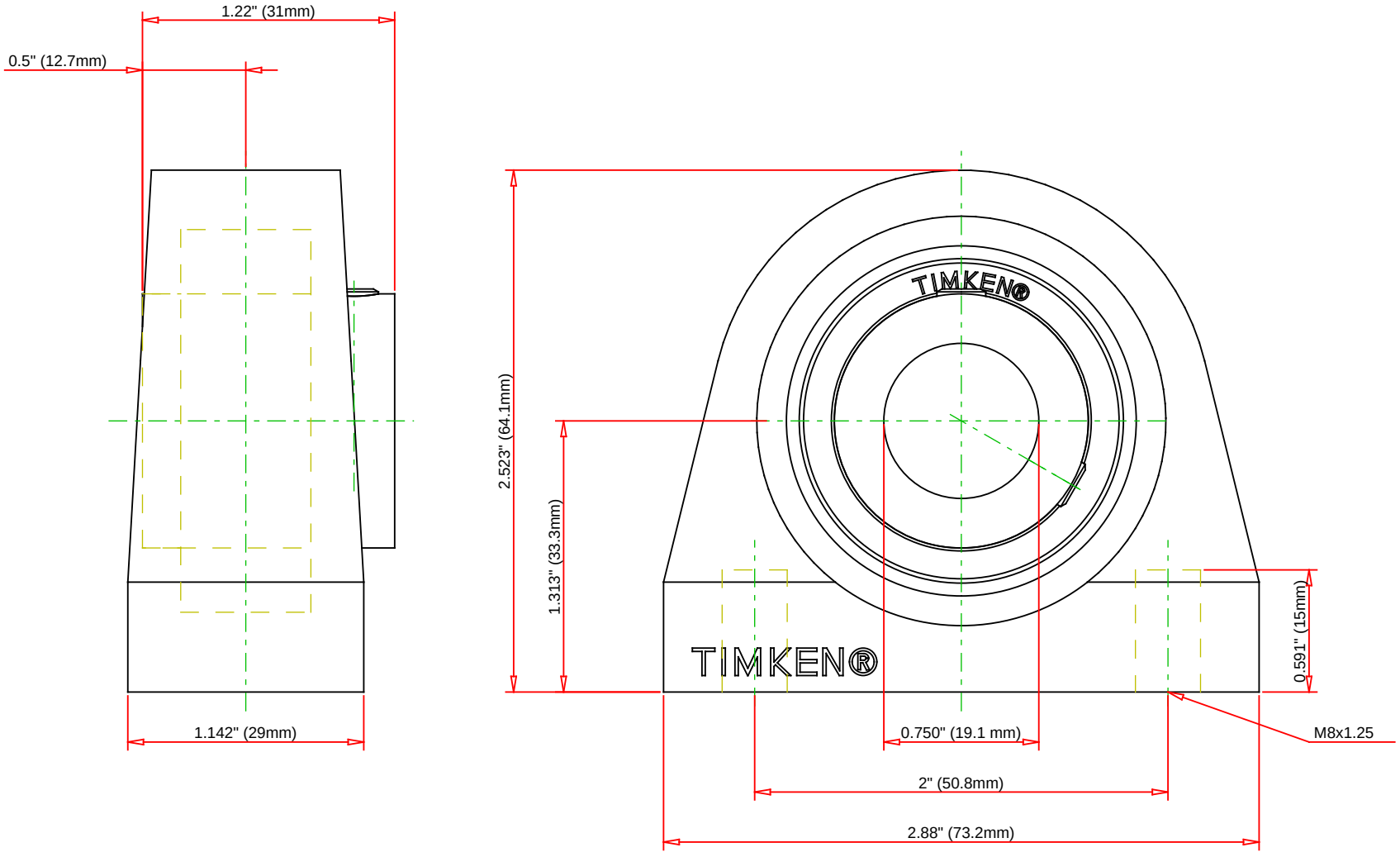

Bearing Number	SUC204-12-IP69K/F				
Load Ratings - C_r	2451	lbf	10900	N	
Load Ratings - C_{0r}	1203	lbf	5350	N	
Lubrication Type	Standard Food Safe Grease				
Housing Material	Cast Stainless Steel				

TIMKEN®

THE TIMKEN COMPANY
NORTH CANTON, OHIO USA

SUCSTBYM204-12-IP69K/F

Corrosion-Resistant Tapped Base Mounted Bearings - Set Screw Locking

Every reasonable effort has been made to ensure the accuracy of the information contained in this writing, but no liability is accepted for errors, omissions or for any other reason.

FOR DISCUSSION ONLY