The Timken Company
4500 Mt Pleasant St. NW
N. Canton, OH 44720
Phone: (234) 262-3000
E-Mail: CustomerCAD@timken.com • **Web site:** www.timken.com

Part Number SUCSFLQK209-27-IP69K/FVSL613, Corrosion-Resistant QuiKlean® Two-Bolt Flanged Mounted Bearings - Set Screw Locking



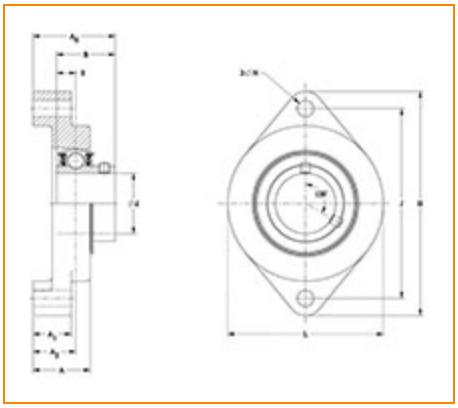

Specifications | Basic Load Ratings | Dimensions

Specifications

Bore Size	1 11/16 in
Seal Type	IP69K Seal
Housing Material	Cast Stainless Steel
Bearing Number	SUC209-27-IP69K/FVSL613
Lubrication Type	Food Grade Solid Lube
Locking Style	Set Screw Locking
Housing Construction	Two-Bolt Flange
Bearing Style	Ball Bearing

Basic Load Ratings

Dynamic Load Rating[1]	6250 lbf 27800 N
Static Load Rating	3642 lbf 16200 N

Dimensions

Total Length H	6.969 in 177.0 mm
Total Height L	4.250 in 108.0 mm
Total Width A0	2.548 in 64.7 mm
Bolt Hole Spacing J	6.110 in 155.2 mm
Base Thickness A1	1.130 in 28.7 mm
Housing Width A	2.000 in 50.8 mm
Bolt Hole Size N	0.531 in 13.5 mm
Center of Bearing from Housing End A2	1.359 in 34.5 mm
Center of Bearing from Bearing End S	0.748 in 19 mm
Inner Ring Width B	1.937 in 49.2 mm

[1] Based on 90×10^6 revolutions L_{10} life, for The Timken Company life calculation method. C_{90} and C_{a90} are radial and thrust values.

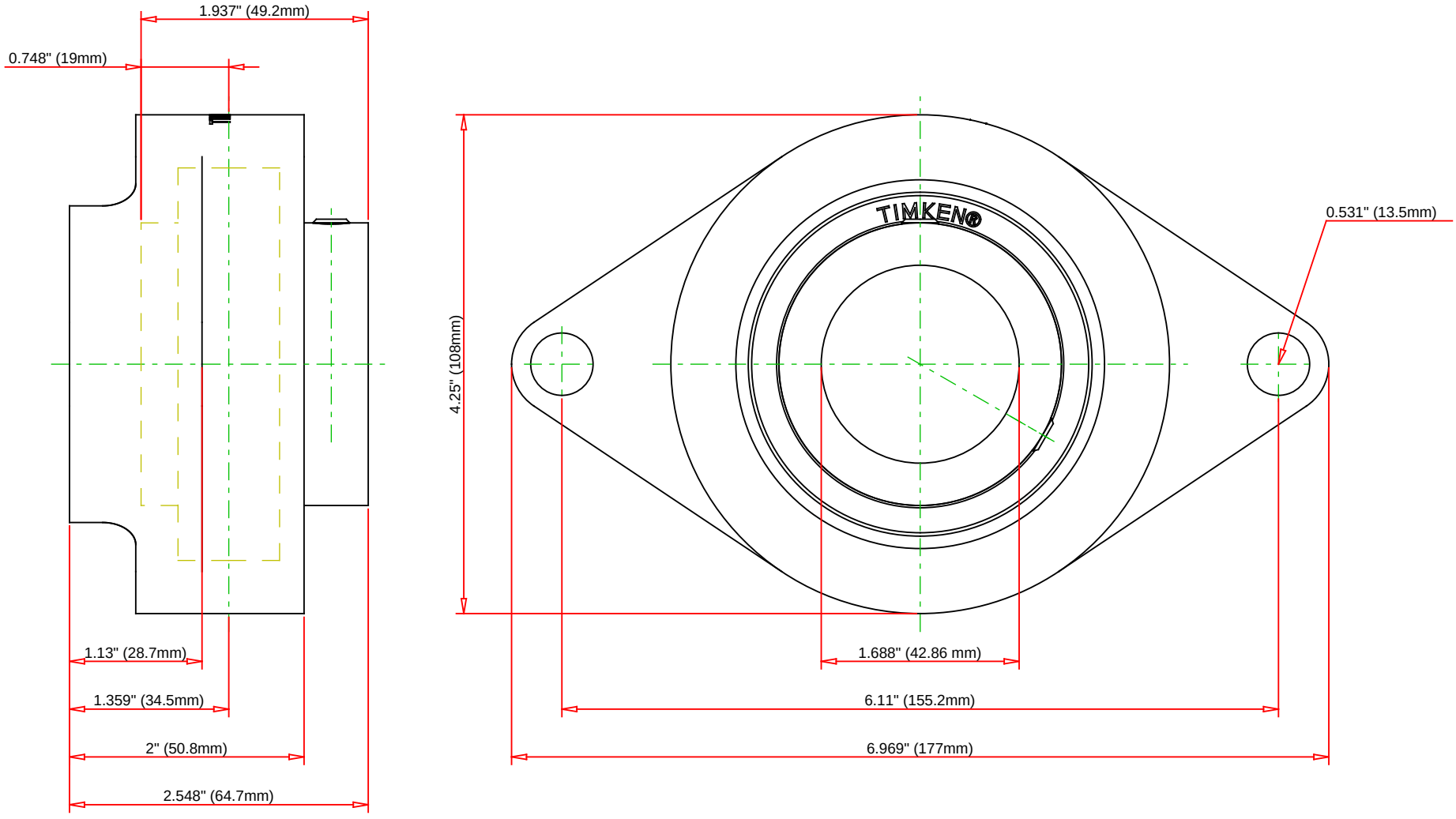

Bearing Number	SUC209-27-IP69K/FVSL613				
Load Ratings - C_r	6250	lbf	27800	N	
Load Ratings - C_{0r}	3642	lbf	16200	N	
Lubrication Type	Food Grade Solid Lube				
Housing Material	Cast Stainless Steel				

TIMKEN

THE TIMKEN COMPANY
NORTH CANTON, OHIO USA

SUCSFLQK209-27-IP69K/FVSL613

Corrosion-Resistant QuiKlean® Two-Bolt Flanged Mounted Bearings - Set Screw Locking

Every reasonable effort has been made to ensure the accuracy of the information contained in this writing, but no liability is accepted for errors, omissions or for any other reason.

FOR DISCUSSION ONLY