The Timken Company
4500 Mt Pleasant St. NW
N. Canton, OH 44720
Phone: (234) 262-3000
E-Mail: CustomerCAD@timken.com • **Web site:** www.timken.com

Part Number SUCSFLQK208-24-IP69K/FVSL613, Corrosion-Resistant QuiKlean® Two-Bolt Flanged Mounted Bearings - Set Screw Locking



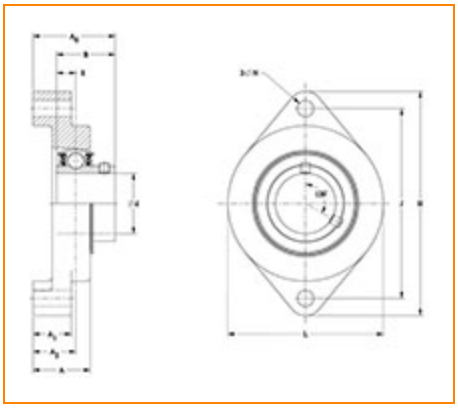

Specifications | Basic Load Ratings | Dimensions

Specifications

Bore Size	1 1/2 in
Seal Type	IP69K Seal
Housing Material	Cast Stainless Steel
Bearing Number	SUC208-24-IP69K/FVSL613
Lubrication Type	Food Grade Solid Lube
Locking Style	Set Screw Locking
Housing Construction	Two-Bolt Flange
Bearing Style	Ball Bearing

Basic Load Ratings

Dynamic Load Rating[1]	5576 lbf 24800 N
Static Load Rating	3215 lbf 14300 N

Dimensions

Total Length H	6.781 in 172.2 mm
Total Height L	4.000 in 101.6 mm
Total Width A0	2.517 in 63.9 mm
Bolt Hole Spacing J	5.656 in 143.7 mm
Base Thickness A1	1.060 in 26.9 mm
Housing Width A	1.906 in 48.4 mm
Bolt Hole Size N	0.531 in 13.5 mm
Center of Bearing from Housing End A2	1.328 in 33.7 mm
Center of Bearing from Bearing End S	0.748 in 19 mm
Inner Ring Width B	1.937 in 49.2 mm

[1] Based on 90×10^6 revolutions L_{10} life, for The Timken Company life calculation method. C_{90} and C_{a90} are radial and thrust values.

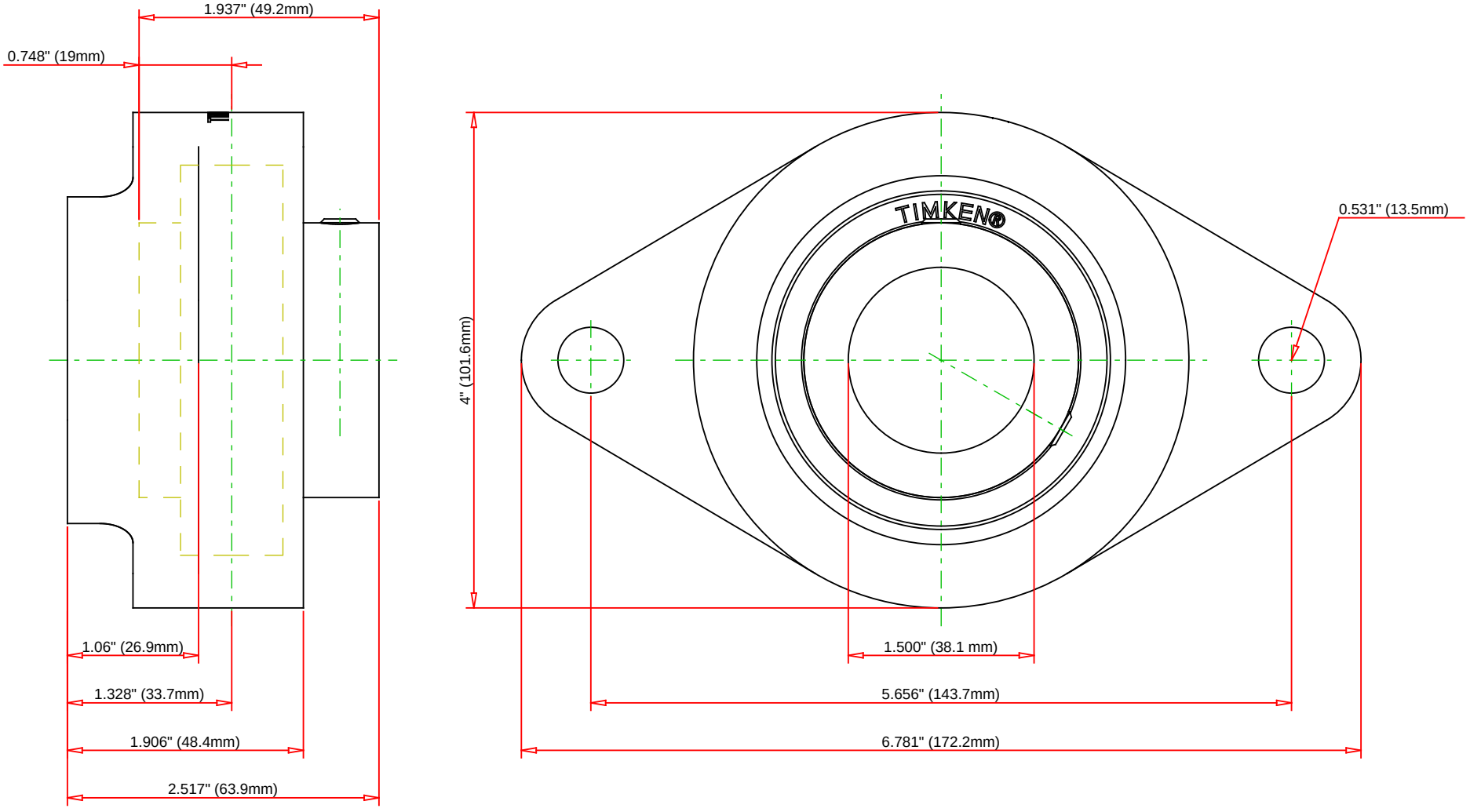

Bearing Number	SUC208-24-IP69K/FVSL613				
Load Ratings - C_r	5576	lbf	24800	N	
Load Ratings - C_{0r}	3215	lbf	14300	N	
Lubrication Type	Food Grade Solid Lube				
Housing Material	Cast Stainless Steel				

TIMKEN

THE TIMKEN COMPANY
NORTH CANTON, OHIO USA

SUCSFLQK208-24-IP69K/FVSL613

Corrosion-Resistant QuiKlean® Two-Bolt Flanged Mounted Bearings - Set Screw Locking

Every reasonable effort has been made to ensure the accuracy of the information contained in this writing, but no liability is accepted for errors, omissions or for any other reason.

FOR DISCUSSION ONLY