The Timken Company
4500 Mt Pleasant St. NW
N. Canton, OH 44720
Phone: (234) 262-3000
E-Mail: CustomerCAD@timken.com • **Web site:** www.timken.com

Part Number SUCBTBY209-IP69K/F, Corrosion-Resistant Tapped Base Mounted Bearings - Set Screw Locking

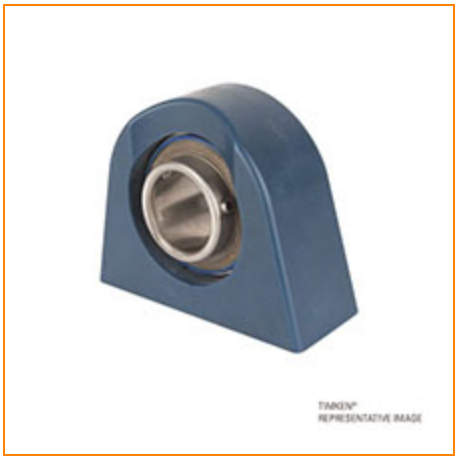

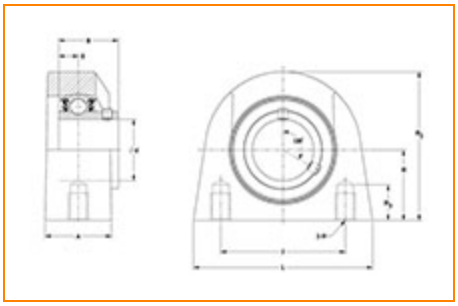

Specifications | Dimensions | Basic Load Ratings

Specifications

Bore Size	45 mm
Seal Type	IP69K Seal
Housing Material	Blue Thermoset (Polymer)
Bearing Number	SUC209-IP69K/F
Lubrication Type	Standard Food Safe Grease
Locking Style	Set Screw Locking
Housing Construction	Tapped Base

Dimensions

Housing Width A	1.970 in 50.0 mm
Total Length L	5.250 in 133.4 mm
Total Height H2	4.380 in 111.3 mm
Thread Length H3	0.803 in 20.4 mm
Bolt Hole Spacing J	3.750 in 95.3 mm
Base to Center Height H	2.125 in 54.0 mm
Center of Bearing from Bearing End S	0.748 in 19.0 mm
Inner Ring Width B	1.937 in 49.2 mm

Basic Load Ratings

Dynamic Load Rating[1]	6250 lbf 27800 N
Static Load Rating	3642 lbf 16200 N

[1] Based on 90×10^6 revolutions L_{10} life, for The Timken Company life calculation method. C_{90} and C_{a90} are radial and thrust values.

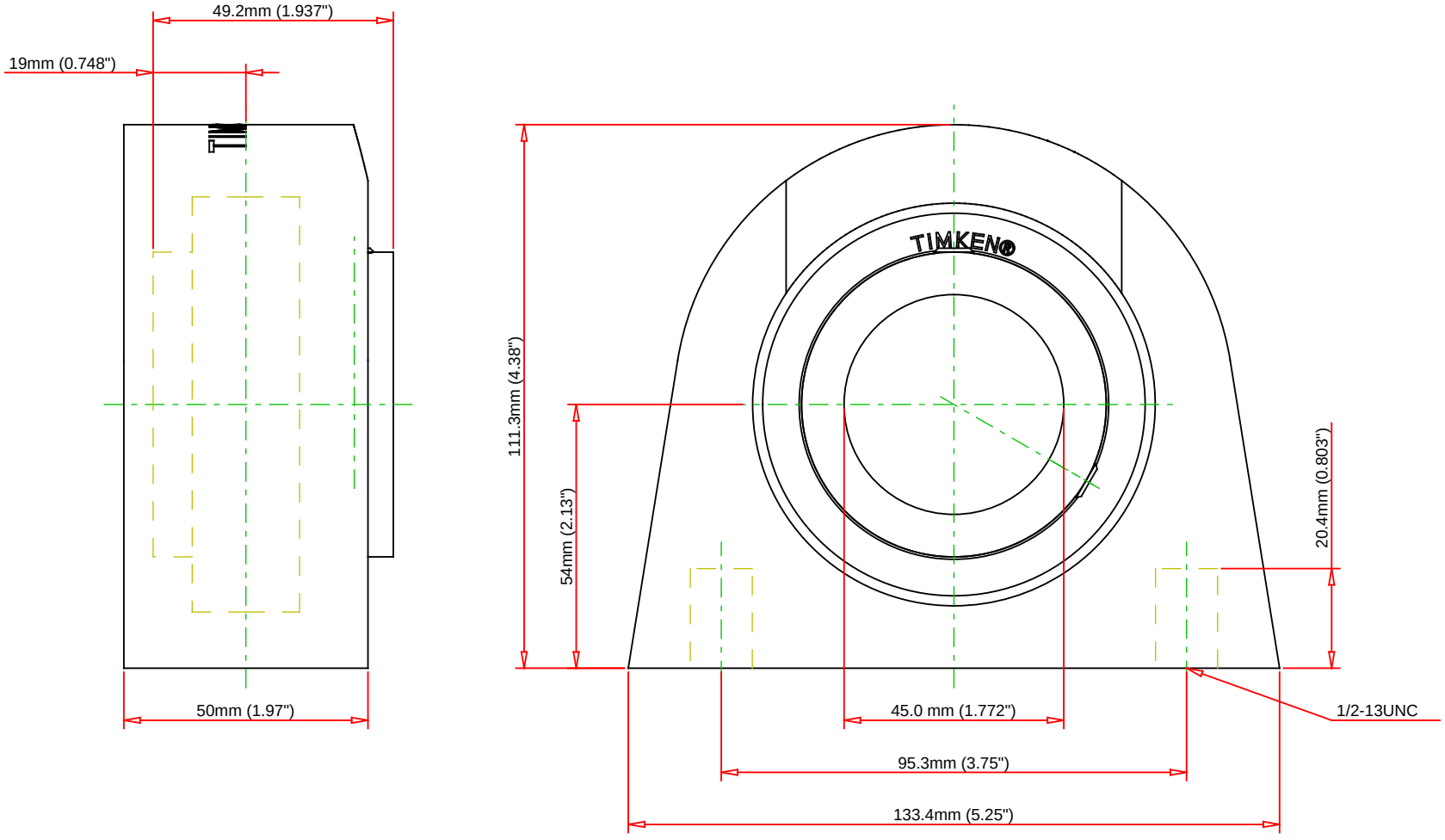

Bearing Number	SUC209-IP69K/F				
Load Ratings - C_r	6250	lbf	27800	N	
Load Ratings - C_{0r}	3642	lbf	16200	N	
Lubrication Type	Standard Food Safe Grease				
Housing Material	Blue Thermoset (Polymer)				

TIMKEN

THE TIMKEN COMPANY
NORTH CANTON, OHIO USA

SUCBTBY209-IP69K/F

Corrosion-Resistant Tapped Base Mounted Bearings - Set Screw Locking

Every reasonable effort has been made to ensure the accuracy of the information contained in this writing, but no liability is accepted for errors, omissions or for any other reason.

FOR DISCUSSION ONLY