**The Timken Company**
4500 Mt Pleasant St. NW
N. Canton, OH 44720
**Phone:** (234) 262-3000
**E-Mail:** CustomerCAD@timken.com • **Web site:** www.timken.com

# Part Number SUCBTBY208-IP69K/F, Corrosion-Resistant Tapped Base Mounted Bearings - Set Screw Locking

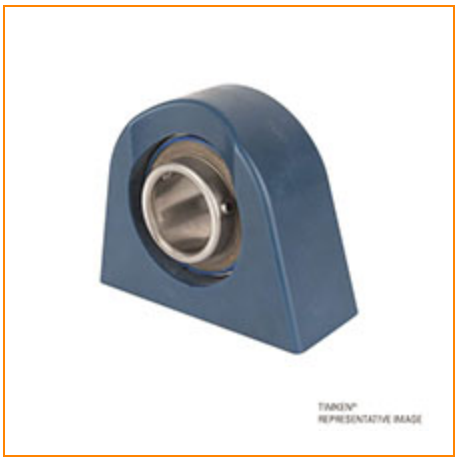

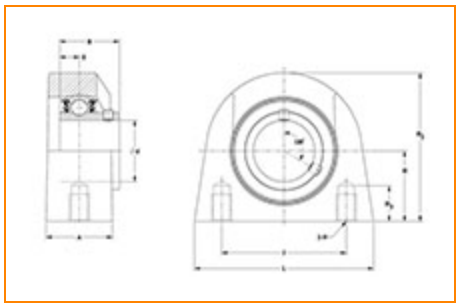

Specifications | Dimensions | Basic Load Ratings

## Specifications

| | |
|---|---|
| **Bore Size** | 40 mm |
| **Seal Type** | IP69K Seal |
| **Housing Material** | Blue Thermoset (Polymer) |
| **Bearing Number** | SUC208-IP69K/F |
| **Lubrication Type** | Standard Food Safe Grease |
| **Locking Style** | Set Screw Locking |
| **Housing Construction** | Tapped Base |

## Dimensions

| | |
|---|---|
| **Housing Width A** | 1.880 in<br>47.8 mm |
| **Total Length L** | 4.750 in<br>120.7 mm |
| **Total Height H2** | 4.130 in<br>104.8 mm |
| **Thread Length H3** | 0.803 in<br>20.4 mm |
| **Bolt Hole Spacing J** | 3.500 in<br>88.9 mm |
| **Base to Center Height H** | 1.938 in<br>49.3 mm |
| **Center of Bearing from Bearing End S** | 0.748 in<br>19.0 mm |
| **Inner Ring Width B** | 1.937 in<br>49.2 mm |

## Basic Load Ratings

| | |
|---|---|
| **Dynamic Load Rating[1]** | 5576 lbf<br>24800 N |
| **Static Load Rating** | 3215 lbf<br>14300 N |

[1] Based on $90 \times 10^6$ revolutions $L_{10}$ life, for The Timken Company life calculation method. $C_{90}$ and $C_{a90}$ are radial and thrust values.

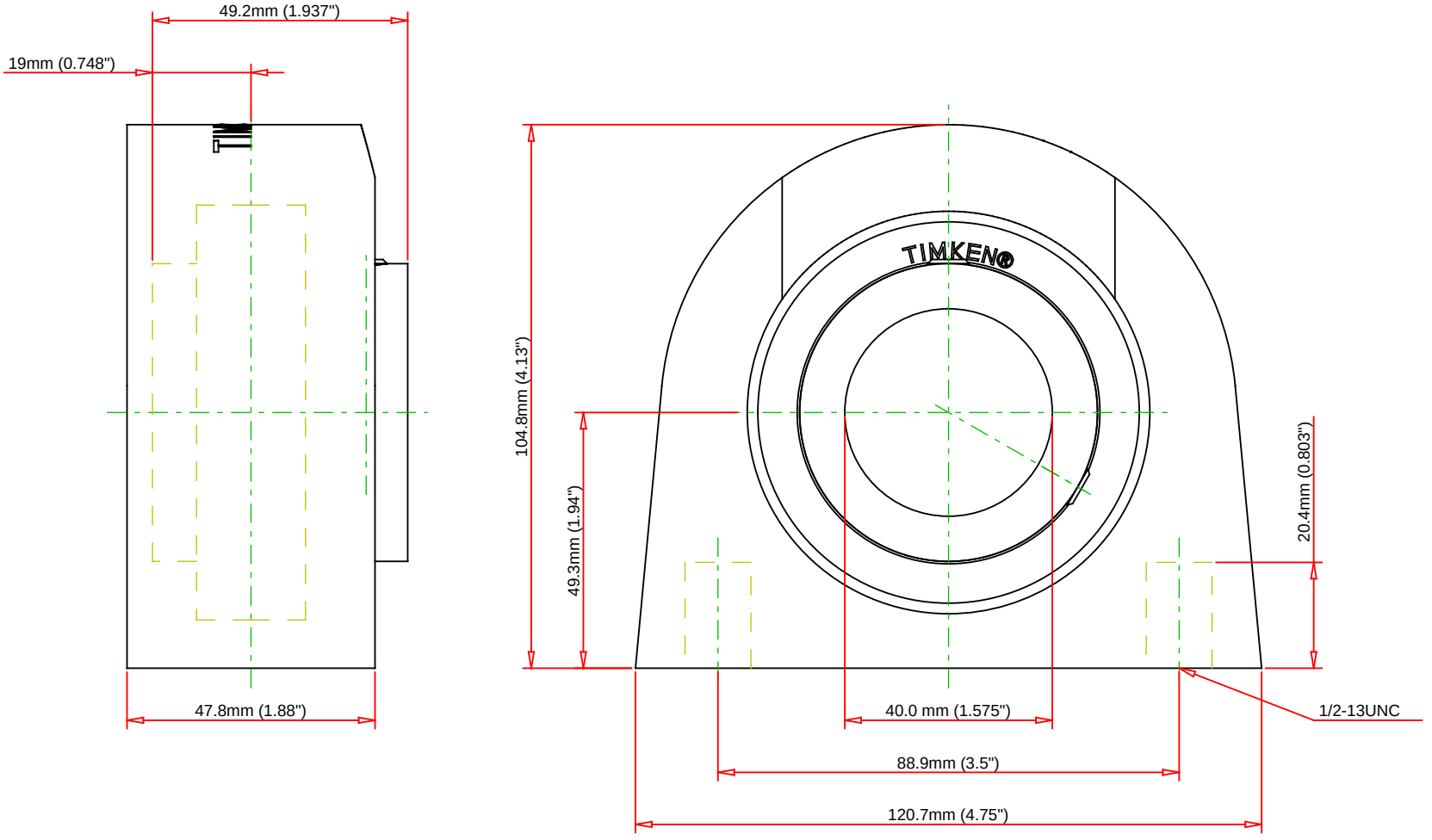


| | | | | | |
|---|---|---|---|---|---|
| Bearing Number | SUC208-IP69K/F | | | | |
| Load Ratings - $C_r$ | 5576 | lbf | 24800 | N | |
| Load Ratings - $C_{0r}$ | 3215 | lbf | 14300 | N | |
| Lubrication Type | Standard Food Safe Grease | | | | |
| Housing Material | Blue Thermoset (Polymer) | | | | |

TIMKEN

THE TIMKEN COMPANY
NORTH CANTON, OHIO USA

# SUCBTBY208-IP69K/F

Corrosion-Resistant Tapped Base Mounted Bearings - Set Screw Locking

Every reasonable effort has been made to ensure the accuracy of the information contained in this writing, but no liability is accepted for errors, omissions or for any other reason.

FOR DISCUSSION ONLY