The Timken Company
4500 Mt Pleasant St. NW
N. Canton, OH 44720
Phone: (234) 262-3000
E-Mail: CustomerCAD@timken.com • **Web site:** www.timken.com

Part Number SUC209-26-IP69K/FVSL613, Corrosion-Resistant Inserts – Stainless Steel Ball Bearing Set Screw Locking



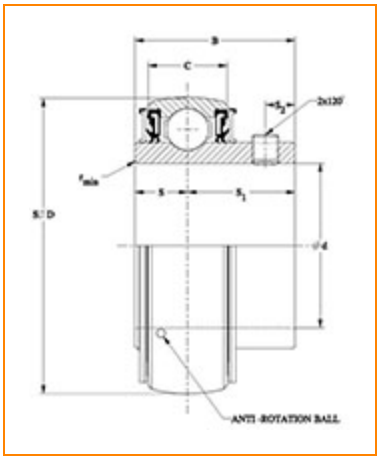

Specifications | Dimensions | Basic Load Ratings

Specifications

Bore Shape	Cylindrical bore
Type	Insert Bearing
Locking Style	Set Screw Locking
Seal Type	IP69K Seal
Bore Size	1 5/8 in
Lubrication Type	Food Grade Solid Lube
Bearing Style	Ball Bearing

Dimensions

Outside Diameter D	3.346 in 85 mm
Outside Ring Width C	0.866 in 22.0 mm
Radius r[1]	0.043 in 1.1 mm
Groove Position C1	0.236 in 6.0 mm
Center of Bearing from End S	0.748 in 19.0 mm
Inside Ring Width B	1.937 in 49.2 mm
Dimension S1	1.189 in 30.2 mm
Set Screw Distance S2	0.315 in 8.0 mm
Set Screw Size	M8×1
Number of Set Screw	2
Angle between Set Screws	120 °

Basic Load Ratings

Static Load Rating	3642 lbf 16200 N
Dynamic Load Rating[2]	6250 lbf 27800 N

[1] These maximum fillet radii will be cleared by the bearing corners.

[2] Based on 90 x 10^6 revolutions L_{10} life, for The Timken Company life calculation method. C_{90} and C_{a90} are radial and thrust values.

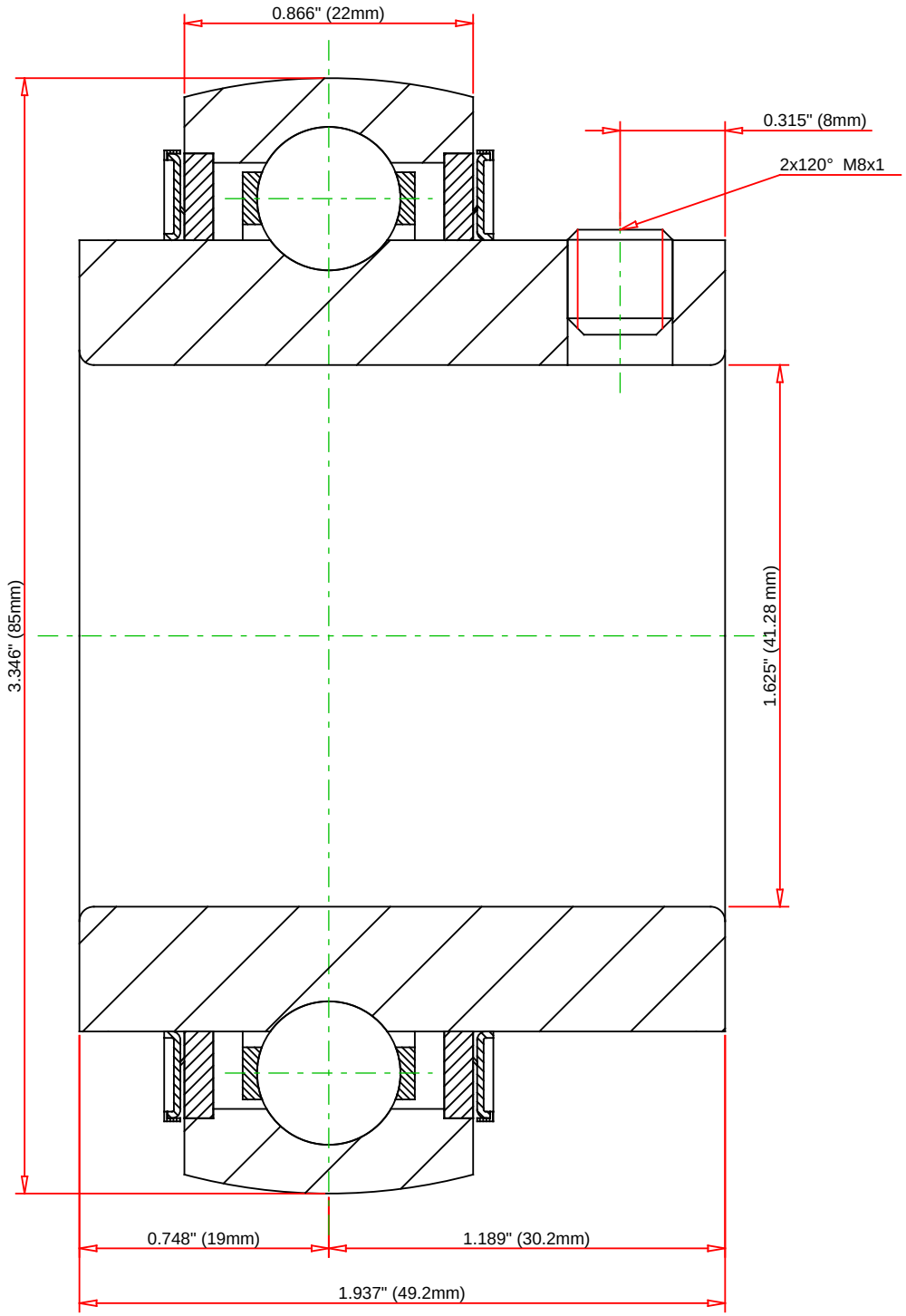

Lubrication Type	Food Grade Solid Lube

TIMKEN®

THE TIMKEN COMPANY
NORTH CANTON, OHIO USA

SUC209-26-IP69K/FVSL613

Corrosion-Resistant Inserts – Stainless Steel Ball Bearing Set Screw Locking

Basic Load Ratings - C_r	6250 lbf	27800 N
Load Ratings - C_{0r}	3642 lbf	16200 N

Every reasonable effort has been made to ensure the accuracy of the information contained in this writing, but no liability is accepted for errors, omissions or for any other reason.

FOR DISCUSSION ONLY