The Timken Company
4500 Mt Pleasant St. NW
N. Canton, OH 44720
Phone: (234) 262-3000
E-Mail: CustomerCAD@timken.com • **Web site:** www.timken.com

Part Number SUC208-24-IP69K/FVSL613, Corrosion-Resistant Inserts – Stainless Steel Ball Bearing Set Screw Locking



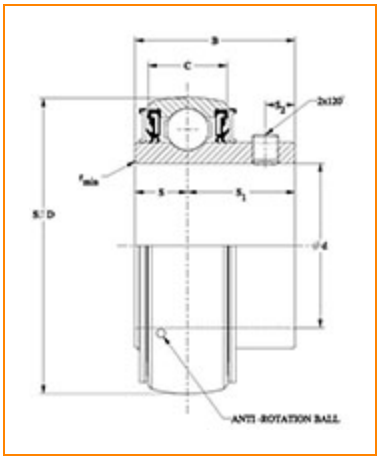

Specifications | Dimensions | Basic Load Ratings

Specifications

Bore Shape	Cylindrical bore
Type	Insert Bearing
Locking Style	Set Screw Locking
Seal Type	IP69K Seal
Bore Size	1 1/2 in
Lubrication Type	Food Grade Solid Lube
Bearing Style	Ball Bearing

Dimensions

Outside Diameter D	3.150 in 80 mm
Outside Ring Width C	0.827 in 21 mm
Radius r[1]	0.043 in 1.1 mm
Groove Position C1	0.232 in 5.9 mm
Center of Bearing from End S	0.748 in 19.0 mm
Inside Ring Width B	1.937 in 49.2 mm
Dimension S1	1.189 in 30.2 mm
Set Screw Distance S2	0.315 in 8.0 mm
Set Screw Size	M8×1
Number of Set Screw	2
Angle between Set Screws	120 °

Basic Load Ratings

Static Load Rating	3215 lbf 14300 N
Dynamic Load Rating[2]	5576 lbf 24800 N

[1] These maximum fillet radii will be cleared by the bearing corners.

[2] Based on 90 x 10^6 revolutions L_{10} life, for The Timken Company life calculation method. C_{90} and C_{a90} are radial and thrust values.

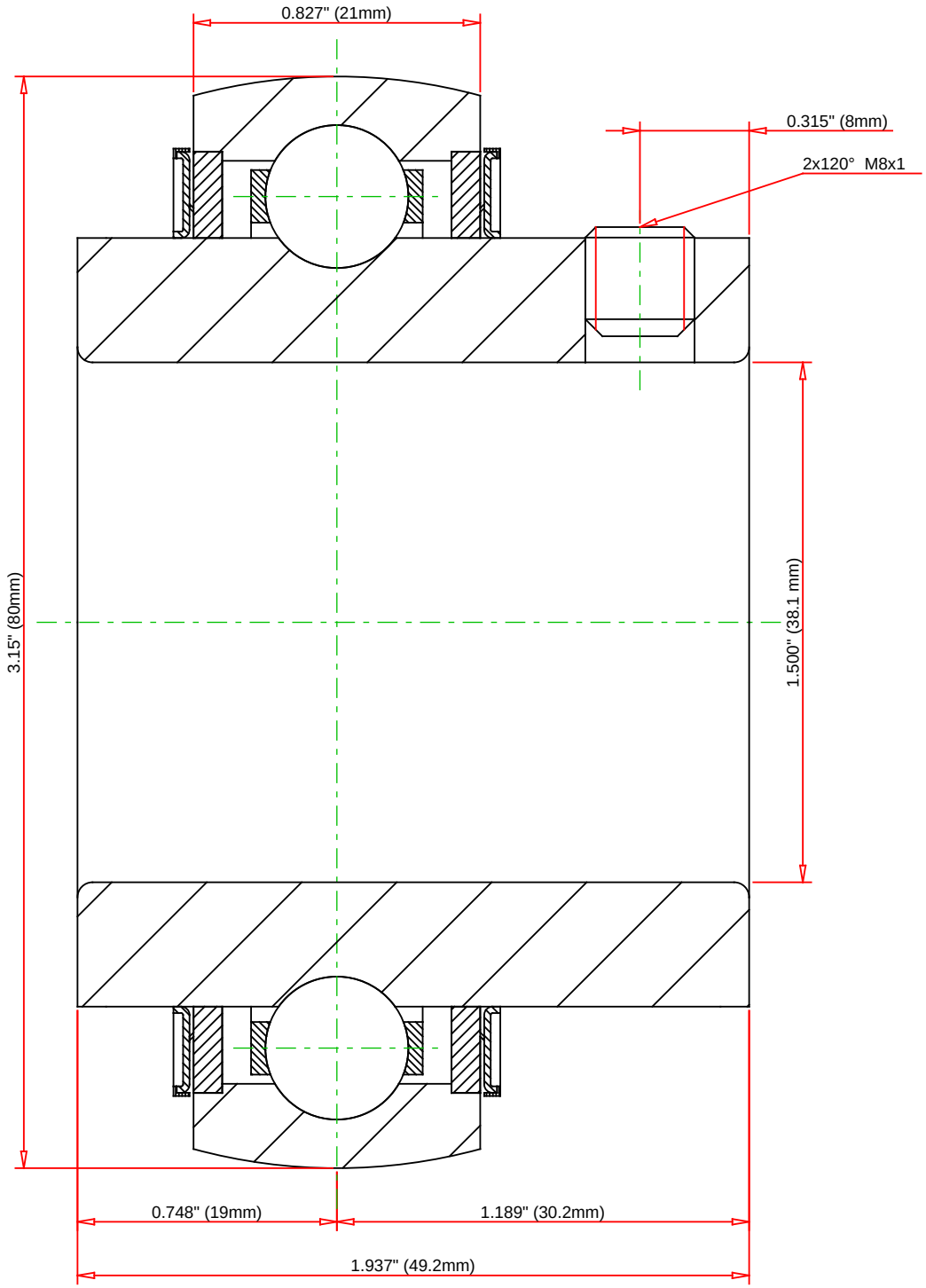

Lubrication Type	Food Grade Solid Lube

TIMKEN®

THE TIMKEN COMPANY
NORTH CANTON, OHIO USA

SUC208-24-IP69K/FVSL613

Corrosion-Resistant Inserts – Stainless Steel Ball Bearing Set Screw Locking

Basic Load Ratings - C_r	5576 lbf	24800 N
Load Ratings - C_{0r}	3215 lbf	14300 N

Every reasonable effort has been made to ensure the accuracy of the information contained in this writing, but no liability is accepted for errors, omissions or for any other reason.

FOR DISCUSSION ONLY