The Timken Company
4500 Mt Pleasant St. NW
N. Canton, OH 44720
Phone: (234) 262-3000
E-Mail: CustomerCAD@timken.com • **Web site:** www.timken.com

Part Number SUC207-21-IP69K/FVSL613, Corrosion-Resistant Inserts – Stainless Steel Ball Bearing Set Screw Locking



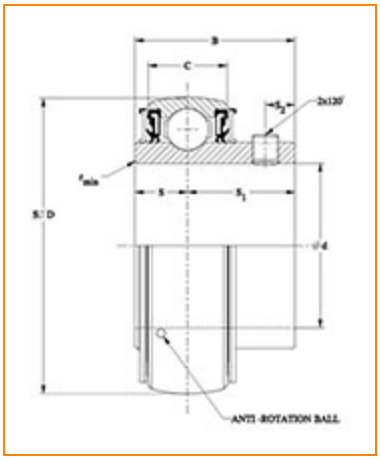

Specifications | Dimensions | Basic Load Ratings

Specifications

Bore Shape	Cylindrical bore
Type	Insert Bearing
Locking Style	Set Screw Locking
Seal Type	IP69K Seal
Bore Size	1.3125 in
Lubrication Type	Food Grade Solid Lube
Bearing Style	Ball Bearing

Dimensions

Outside Diameter D	2.835 in 72 mm
Outside Ring Width C	0.787 in 20 mm
Radius r[1]	0.043 in 1.1 mm
Groove Position C1	0.224 in 5.7 mm
Center of Bearing from End S	0.689 in 17.5 mm
Inside Ring Width B	1.689 in 42.9 mm
Dimension S1	1.000 in 25.4 mm
Set Screw Distance S2	0.256 in 6.5 mm
Set Screw Size	M8×1
Number of Set Screw	2
Angle between Set Screws	120 °

Basic Load Ratings

Static Load Rating	2766 lbf 12300 N
Dynamic Load Rating[2]	4901 lbf 21800 N

[1] These maximum fillet radii will be cleared by the bearing corners.

[2] Based on 90 x 10^6 revolutions L_{10} life, for The Timken Company life calculation method. C_{90} and C_{a90} are radial and thrust values.

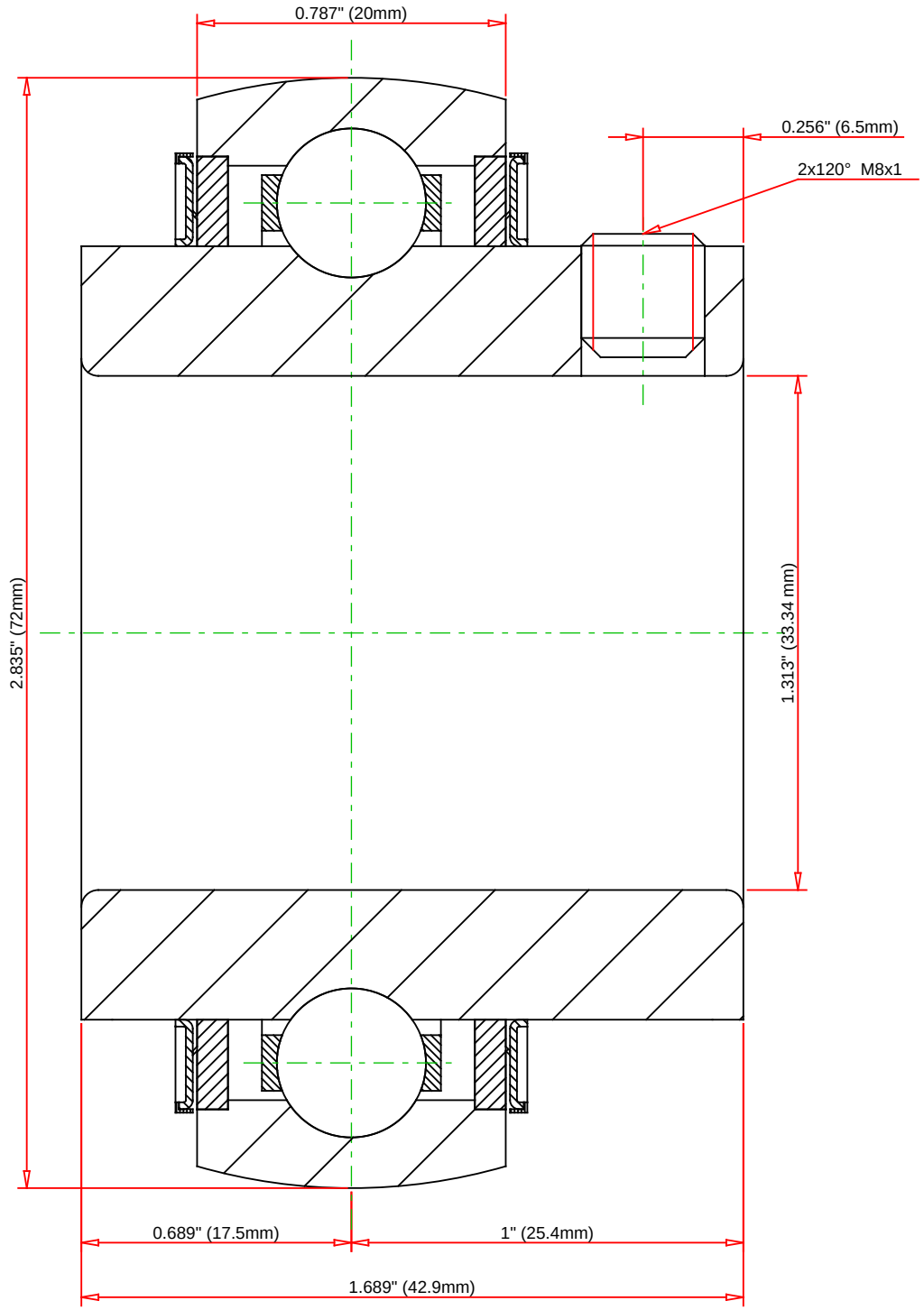

Lubrication Type	Food Grade Solid Lube

TIMKEN®

THE TIMKEN COMPANY
NORTH CANTON, OHIO USA

SUC207-21-IP69K/FVSL613

Corrosion-Resistant Inserts – Stainless Steel Ball Bearing Set Screw Locking

Basic Load Ratings - C_r	4901 lbf	21800 N
Load Ratings - C_{0r}	2766 lbf	12300 N

Every reasonable effort has been made to ensure the accuracy of the information contained in this writing, but no liability is accepted for errors, omissions or for any other reason.

FOR DISCUSSION ONLY