The Timken Company
4500 Mt Pleasant St. NW
N. Canton, OH 44720
Phone: (234) 262-3000
E-Mail: CustomerCAD@timken.com • **Web site:** www.timken.com

Part Number SUC206-18-IP69K/F, Corrosion-Resistant Inserts – Stainless Steel Ball Bearing Set Screw Locking



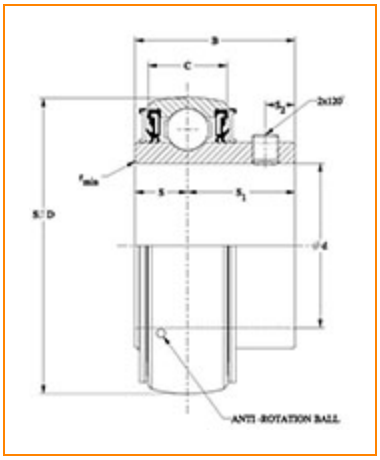

Specifications | Dimensions | Basic Load Ratings

Specifications

Bore Shape	Cylindrical bore
Type	Insert Bearing
Locking Style	Set Screw Locking
Seal Type	IP69K Seal
Bore Size	1.1250 in
Lubrication Type	Standard Food Safe Grease
Bearing Style	Ball Bearing

Dimensions

Outside Diameter D	2.441 in 62 mm
Outside Ring Width C	0.7480 in 19 mm
Radius r[1]	0.039 in 1 mm
Groove Position C1	0.197 in 5.0 mm
Center of Bearing from End S	0.626 in 15.9 mm
Inside Ring Width B	1.5 in 38.1 mm
Dimension S1	0.874 in 22.2 mm
Set Screw Distance S2	0.236 in 6.0 mm
Set Screw Size	M6×0.75
Number of Set Screw	2
Angle between Set Screws	120 °

Basic Load Ratings

Static Load Rating	2035 lbf 9050 N
Dynamic Load Rating[2]	3710 lbf 16500 N

[1] These maximum fillet radii will be cleared by the bearing corners.

[2] Based on 90 x 10^6 revolutions L_{10} life, for The Timken Company life calculation method. C_{90} and C_{a90} are radial and thrust values.

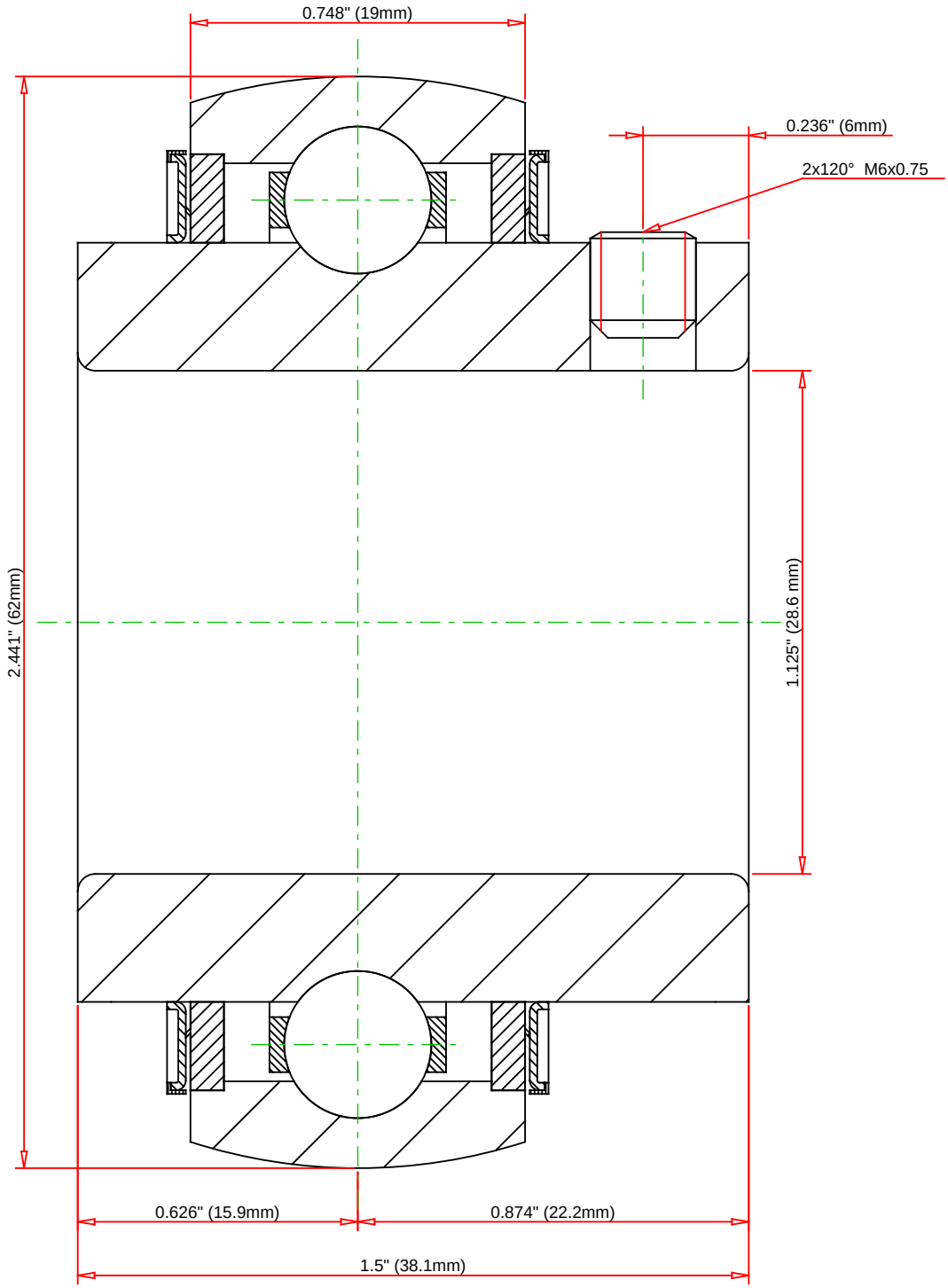

Lubrication Type	Standard Food Safe Grease

TIMKEN®

THE TIMKEN COMPANY
NORTH CANTON, OHIO USA

SUC206-18-IP69K/F

Corrosion-Resistant Inserts – Stainless Steel Ball Bearing Set Screw Locking

Basic Load Ratings - C_r	3710 lbf	16500 N
Load Ratings - C_{0r}	2035 lbf	9050 N

Every reasonable effort has been made to ensure the accuracy of the information contained in this writing, but no liability is accepted for errors, omissions or for any other reason.

FOR DISCUSSION ONLY