The Timken Company
4500 Mt Pleasant St. NW
N. Canton, OH 44720
Phone: (234) 262-3000
E-Mail: CustomerCAD@timken.com • **Web site:** www.timken.com

Part Number SUCBFC210-31-IP69K, Corrosion-Resistant Round Flanged Mounted Bearings - Set Screw Locking



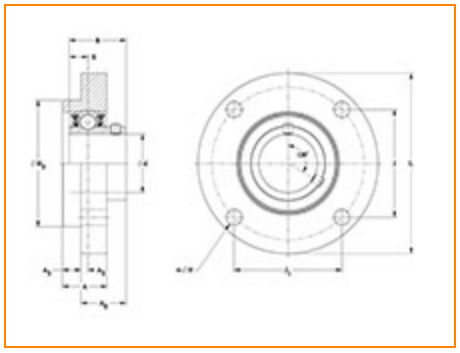

Specifications | Dimensions | Basic Load Ratings

Specifications

Bore Size	1 15/16 in
Seal Type	IP69K Seal
Housing Material	Blue Thermoset (Polymer)
Lubrication Type	Standard Food Safe Grease
Bearing Number	SUC210-31-IP69K/F
Locking Style	Set Screw Locking
Housing Construction	Round Flange
Bearing Style	Ball Bearing

Dimensions

Total Length L	6.059 in 153.9 mm
Total Height L	6.059 in 153.9 mm
Width A0	1.519 in 38.6 mm
Bolt Hole Spacing J	3.622 in 92.0 mm
Housing Width A	1.500 in 38.1 mm
Bolt Hole Size N	0.531 in 13.5 mm
Center of Bearing from Housing End A2	0.236 in 6.0 mm
Center of Bearing from Bearing End S	0.748 in 19.0 mm
Inner Ring Width B	2.031 in 51.6 mm

Basic Load Ratings

Dynamic Load Rating[1]	6700 lbf 29800 N
Static Load Rating	4182 lbf 18600 N

[1] Based on 90×10^6 revolutions L_{10} life, for The Timken Company life calculation method. C_{90} and C_{a90} are radial and thrust values.

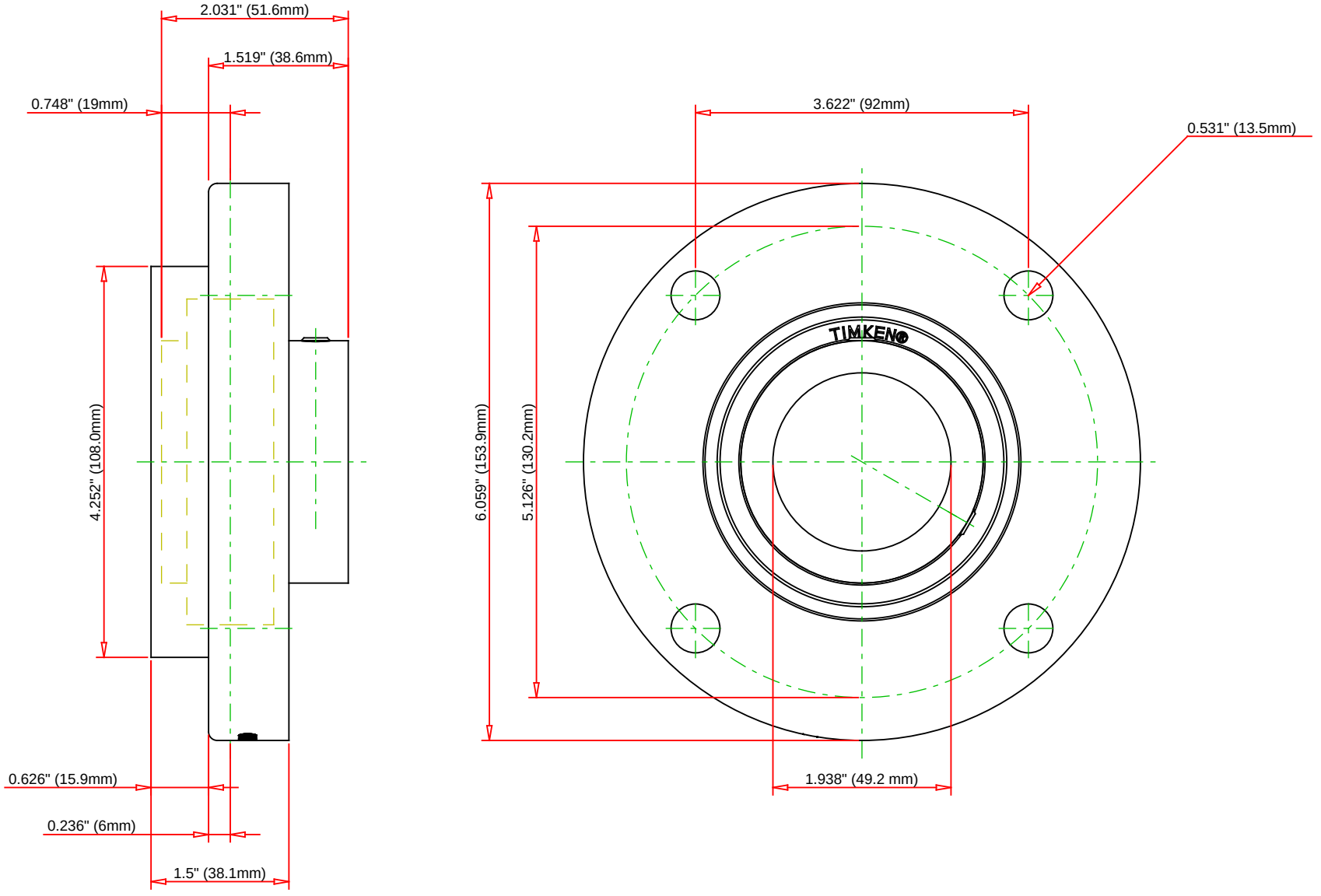

Bearing Number	SUC210-31-IP69K/F				
Load Ratings - C_r	6700	lbf	29800	N	
Load Ratings - C_{0r}	4182	lbf	18600	N	
Lubrication Type	Standard Food Safe Grease				
Housing Material	Blue Thermoset (Polymer)				

TIMKEN

THE TIMKEN COMPANY
NORTH CANTON, OHIO USA

SUCBFC210-31-IP69K

Corrosion-Resistant Round Flanged Mounted Bearings - Set Screw Locking

Every reasonable effort has been made to ensure the accuracy of the information contained in this writing, but no liability is accepted for errors, omissions or for any other reason.

FOR DISCUSSION ONLY