The Timken Company
4500 Mt Pleasant St. NW
N. Canton, OH 44720
Phone: (234) 262-3000
E-Mail: CustomerCAD@timken.com • **Web site:** www.timken.com

Part Number SUC205-14-IP69K/F, Corrosion-Resistant Inserts – Stainless Steel Ball Bearing Set Screw Locking



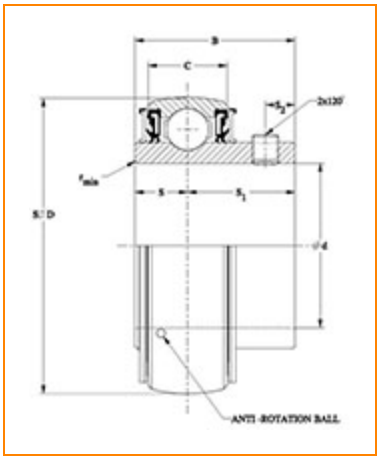

Specifications | Dimensions | Basic Load Ratings

Specifications

Bore Shape	Cylindrical bore
Type	Insert Bearing
Locking Style	Set Screw Locking
Seal Type	IP69K Seal
Bore Size	7/8 in
Lubrication Type	Standard Food Safe Grease
Bearing Style	Ball Bearing

Dimensions

Outside Diameter D	2.047 in 52 mm
Outside Ring Width C	0.669 in 17 mm
Radius r[1]	0.039 in 1 mm
Groove Position C1	0.177 in 4.5 mm
Center of Bearing from End S	0.563 in 14.3 mm
Inside Ring Width B	1.343 in 34.1 mm
Dimension S1	0.780 in 19.8 mm
Set Screw Distance S2	0.217 in 5.5 mm
Set Screw Size	M6×0.75
Number of Set Screw	2
Angle between Set Screws	120 °

Basic Load Ratings

Static Load Rating	1417 lbf 6300 N
Dynamic Load Rating[2]	2676 lbf 11900 N

[1] These maximum fillet radii will be cleared by the bearing corners.

[2] Based on 90 x 10^6 revolutions L_{10} life, for The Timken Company life calculation method. C_{90} and C_{a90} are radial and thrust values.

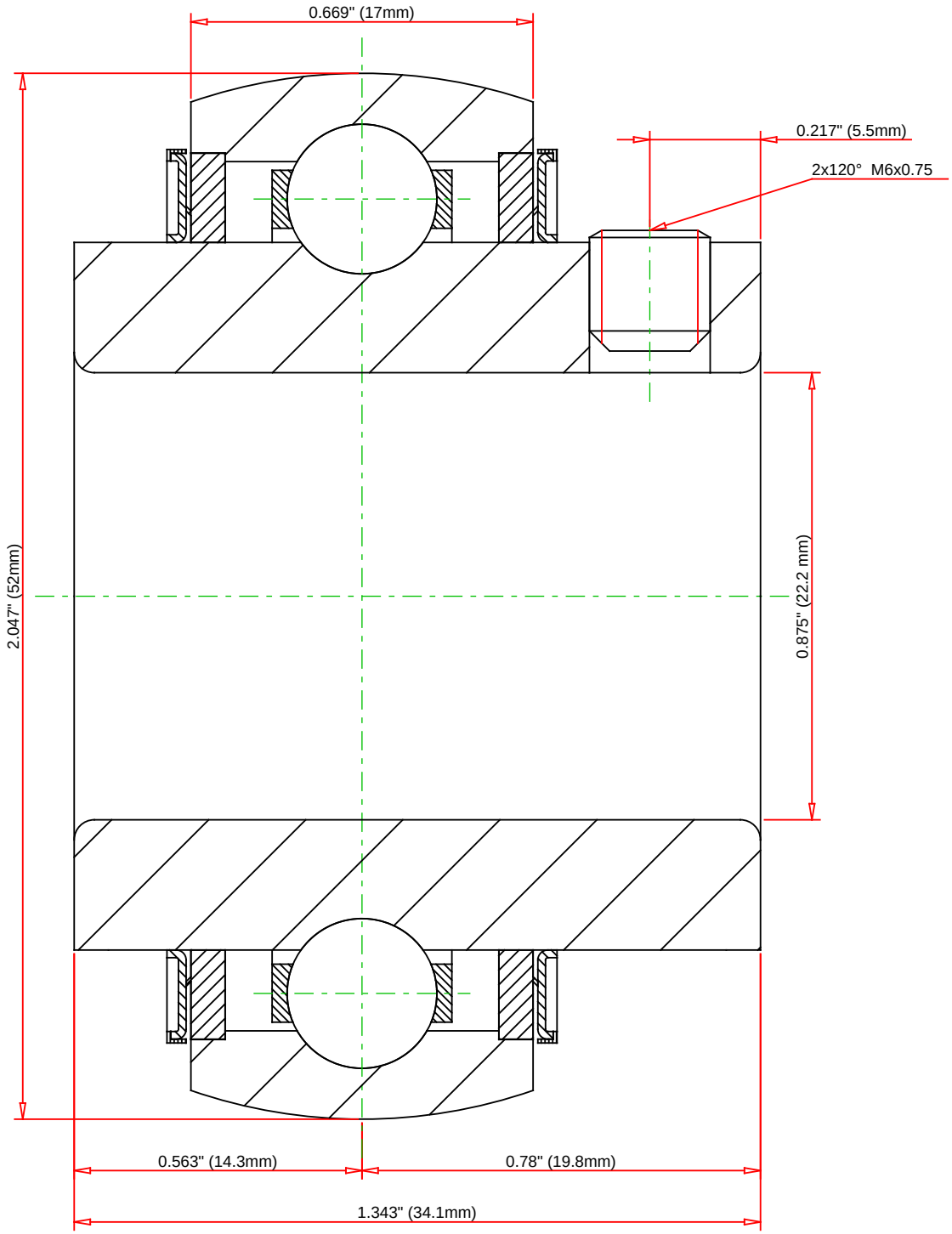

Lubrication Type	Standard Food Safe Grease

TIMKEN®

THE TIMKEN COMPANY
NORTH CANTON, OHIO USA

SUC205-14-IP69K/F

Corrosion-Resistant Inserts – Stainless Steel Ball Bearing Set Screw Locking

Basic Load Ratings - C_r	2676 lbf	11900 N
Load Ratings - C_{0r}	1417 lbf	6300 N

Every reasonable effort has been made to ensure the accuracy of the information contained in this writing, but no liability is accepted for errors, omissions or for any other reason.

FOR DISCUSSION ONLY