The Timken Company
4500 Mt Pleasant St. NW
N. Canton, OH 44720
Phone: (234) 262-3000
E-Mail: CustomerCAD@timken.com • **Web site:** www.timken.com

Part Number SUCBFC208-24-IP69K, Corrosion-Resistant Round Flanged Mounted Bearings - Set Screw Locking



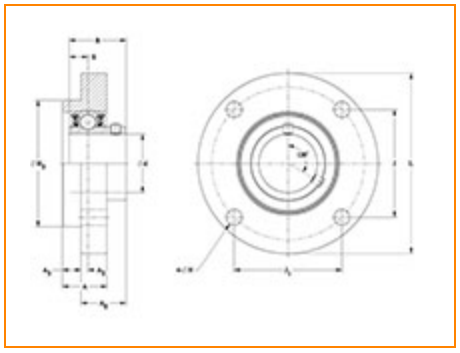

Specifications | Dimensions | Basic Load Ratings

Specifications

Bore Size	1 1/2 in
Seal Type	IP69K Seal
Housing Material	Blue Thermoset (Polymer)
Lubrication Type	Standard Food Safe Grease
Bearing Number	SUC208-24-IP69K/F
Locking Style	Set Screw Locking
Housing Construction	Round Flange
Bearing Style	Ball Bearing

Dimensions

Total Length L	5.252 in 133.4 mm
Total Height L	5.252 in 133.4 mm
Width A0	1.500 in 38.1 mm
Bolt Hole Spacing J	3.094 in 78.6 mm
Housing Width A	1.315 in 33.4 mm
Bolt Hole Size N	0.469 in 11.9 mm
Center of Bearing from Housing End A2	0.311 in 7.9 mm
Center of Bearing from Bearing End S	0.748 in 19.0 mm
Inner Ring Width B	1.937 in 49.2 mm

Basic Load Ratings

Dynamic Load Rating[1]	5576 lbf 24800 N
Static Load Rating	3215 lbf 14300 N

[1] Based on 90×10^6 revolutions L_{10} life, for The Timken Company life calculation method. C_{90} and C_{a90} are radial and thrust values.

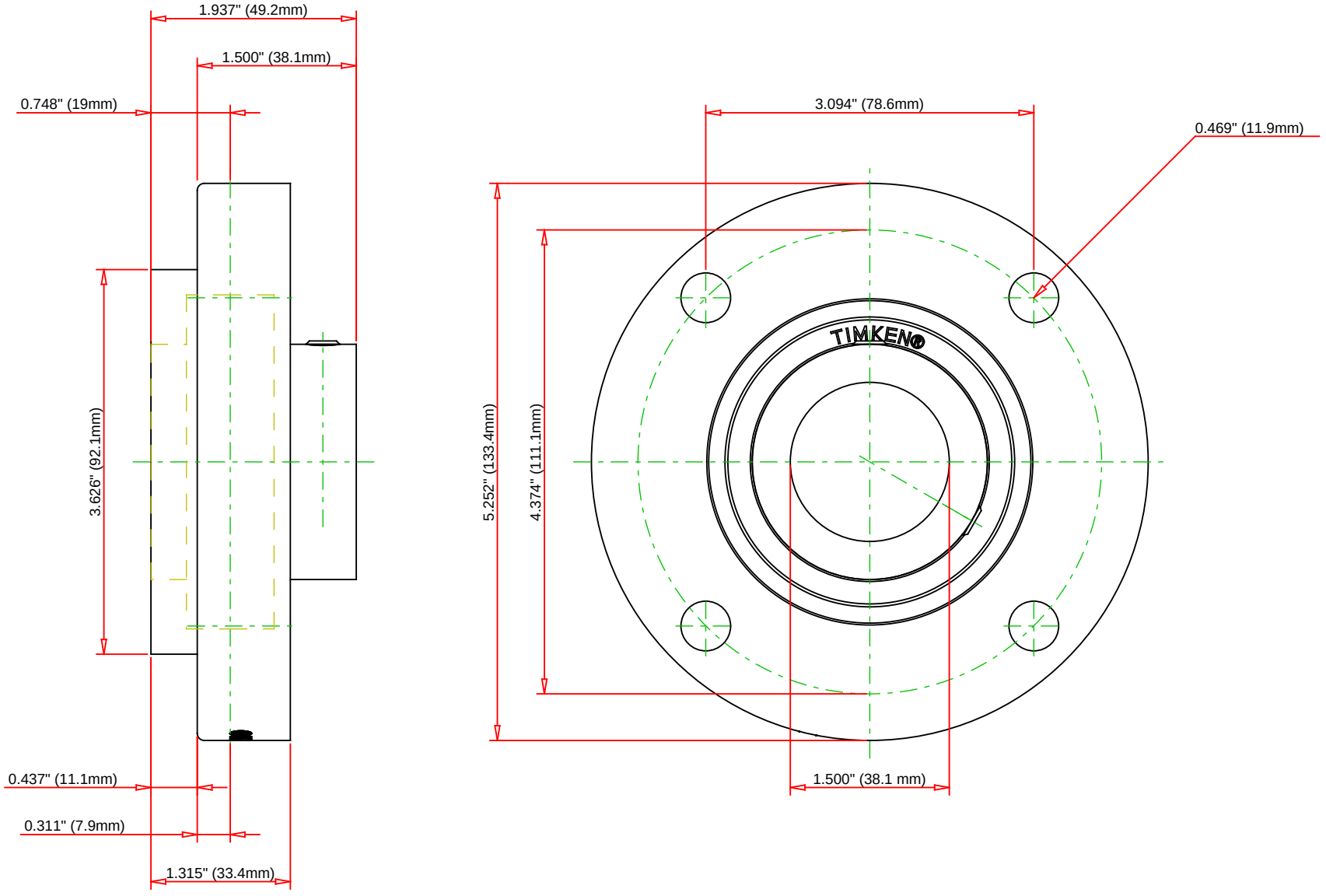

Bearing Number	SUC208-24-IP69K/F				
Load Ratings - C_r	5576	lbf	24800	N	
Load Ratings - C_{0r}	3215	lbf	14300	N	
Lubrication Type	Standard Food Safe Grease				
Housing Material	Blue Thermoset (Polymer)				

TIMKEN

THE TIMKEN COMPANY
NORTH CANTON, OHIO USA

SUCBFC208-24-IP69K

Corrosion-Resistant Round Flanged Mounted Bearings - Set Screw Locking

Every reasonable effort has been made to ensure the accuracy of the information contained in this writing, but no liability is accepted for errors, omissions or for any other reason.

FOR DISCUSSION ONLY