The Timken Company
4500 Mt Pleasant St. NW
N. Canton, OH 44720
Phone: (234) 262-3000
E-Mail: CustomerCAD@timken.com • **Web site:** www.timken.com

Part Number SUCPLFL206-19-IP69K/FVSL613, Corrosion-Resistant Two-Bolt Flanged Mounted Bearings - Set Screw Locking



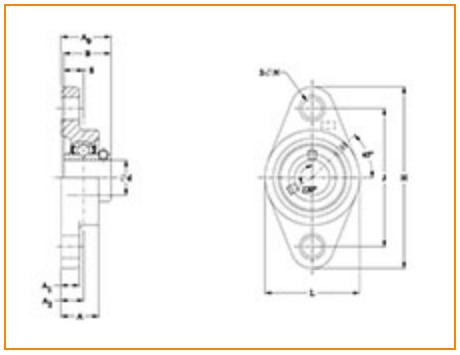

Specifications | Dimensions | Basic Load Ratings

Specifications

Bore Size	1 3/16 in
Seal Type	IP69K Seal
Housing Material	White Thermoplastic (Polymer)
Bearing Number	SUC206-19-IP69K/FVSL613
Lubrication Type	Food Grade Solid Lube
Locking Style	Set Screw Locking
Housing Construction	Two-Bolt Flange
Bearing Style	Ball Bearing

Dimensions

Total Length H	5.827 in 148.0 mm
Total Height L	3.150 in 80.0 mm
Total Width A0	1.583 in 40.2 mm
Bolt Hole Spacing J	4.606 in 117.0 mm
Housing Width A	1.220 in 31.0 mm
Bolt Hole Size N	0.433 in 11.0 mm
Center of Bearing from Housing End A2	0.709 in 18.0 mm
Center of Bearing from Bearing End S	0.626 in 15.9 mm
Inner Ring Width B	1.500 in 38.1 mm

Basic Load Ratings

Static Load Rating	2035 lbf 9050 N
Dynamic Load Rating	3710 lbf 16500 N

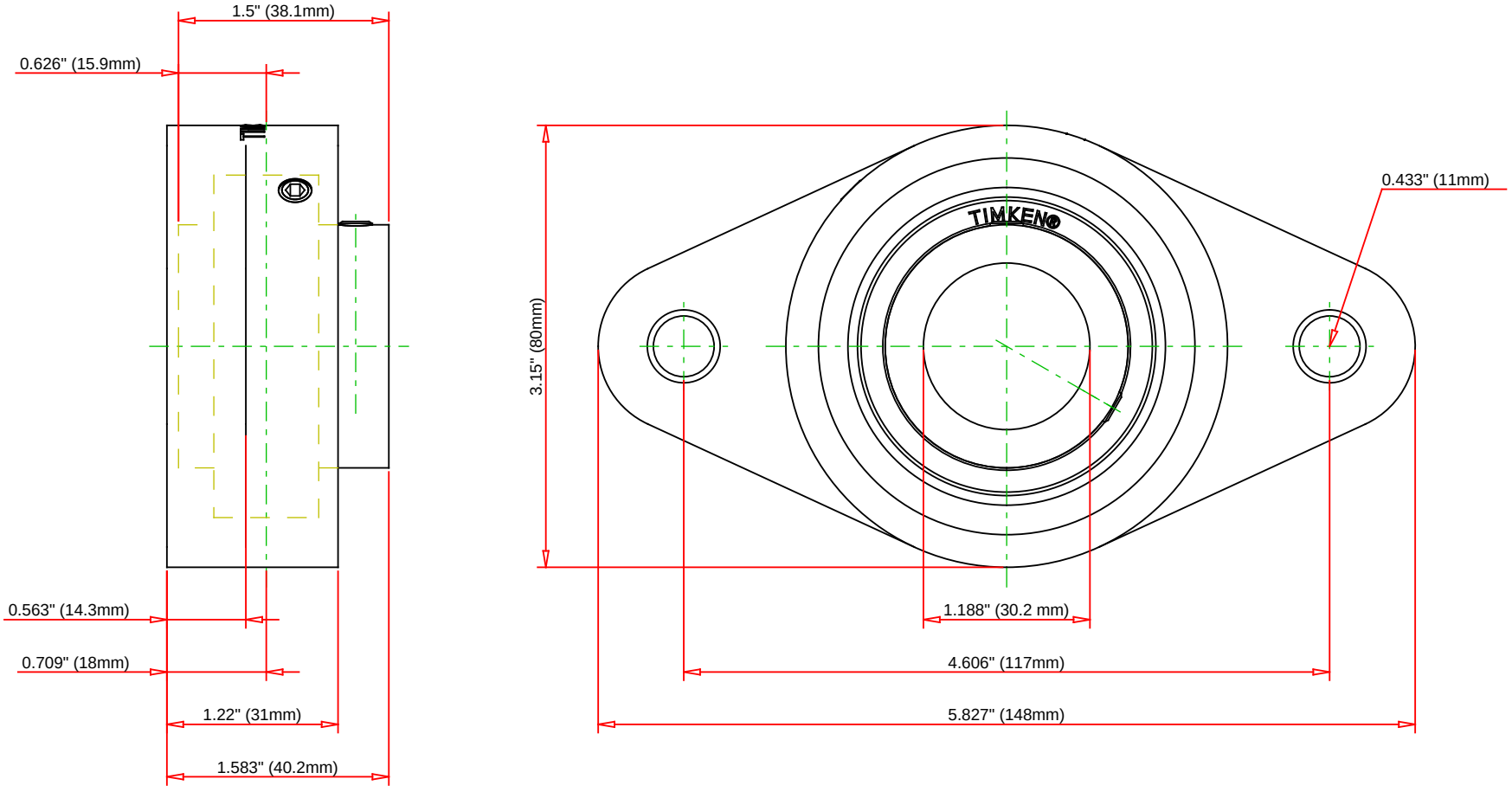

Bearing Number	SUC206-19-IP69K/FVSL613				
Load Ratings - C_r	3710	lbf	16500	N	
Load Ratings - C_{0r}	2035	lbf	9050	N	
Lubrication Type	Food Grade Solid Lube				
Housing Material	White Thermoplastic (Polymer)				

TIMKEN

THE TIMKEN COMPANY
NORTH CANTON, OHIO USA

SUCPLFL206-19-IP69K/FVSL613

Corrosion-Resistant Two-Bolt Flanged Mounted Bearings - Set Screw Locking

Every reasonable effort has been made to ensure the accuracy of the information contained in this writing, but no liability is accepted for errors, omissions or for any other reason.

FOR DISCUSSION ONLY