The Timken Company
4500 Mt Pleasant St. NW
N. Canton, OH 44720
Phone: (234) 262-3000
E-Mail: CustomerCAD@timken.com • **Web site:** www.timken.com

Part Number SUCPLFL205-16-IP69K/F, Corrosion-Resistant Two-Bolt Flanged Mounted Bearings - Set Screw Locking



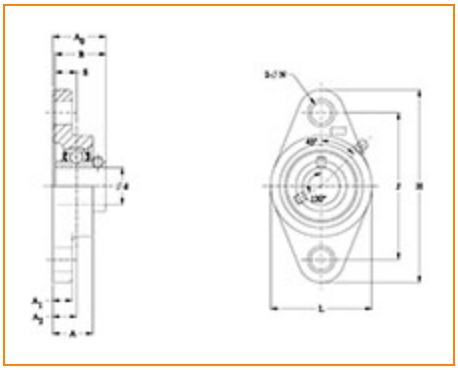

Specifications | Dimensions | Basic Load Ratings

Specifications

Bore Size	1.0000 in
Seal Type	IP69K Seal
Housing Material	White Thermoplastic (Polymer)
Bearing Number	SUC205-16-IP69K/F
Lubrication Type	Standard Food Safe Grease
Locking Style	Set Screw Locking
Housing Construction	Two-Bolt Flange
Bearing Style	Ball Bearing

Dimensions

Total Length H	5.157 in 113.0 mm
Total Height L	2.756 in 70.0 mm
Total Width A0	1.410 in 35.8 mm
Bolt Hole Spacing J	3.898 in 90.0 mm
Housing Width A	1.110 in 28.2 mm
Bolt Hole Size N	0.433 in 11.0 mm
Center of Bearing from Housing End A2	0.630 in 16.0 mm
Center of Bearing from Bearing End S	0.563 in 14.3 mm
Inner Ring Width B	1.343 in 34.1 mm

Basic Load Ratings

Static Load Rating	1417 lbf 6300 N
Dynamic Load Rating	2676 lbf 11900 N

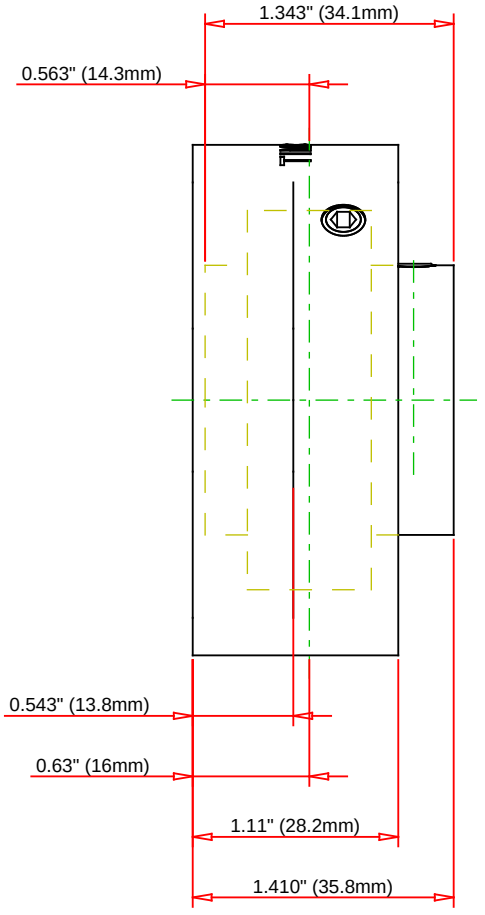

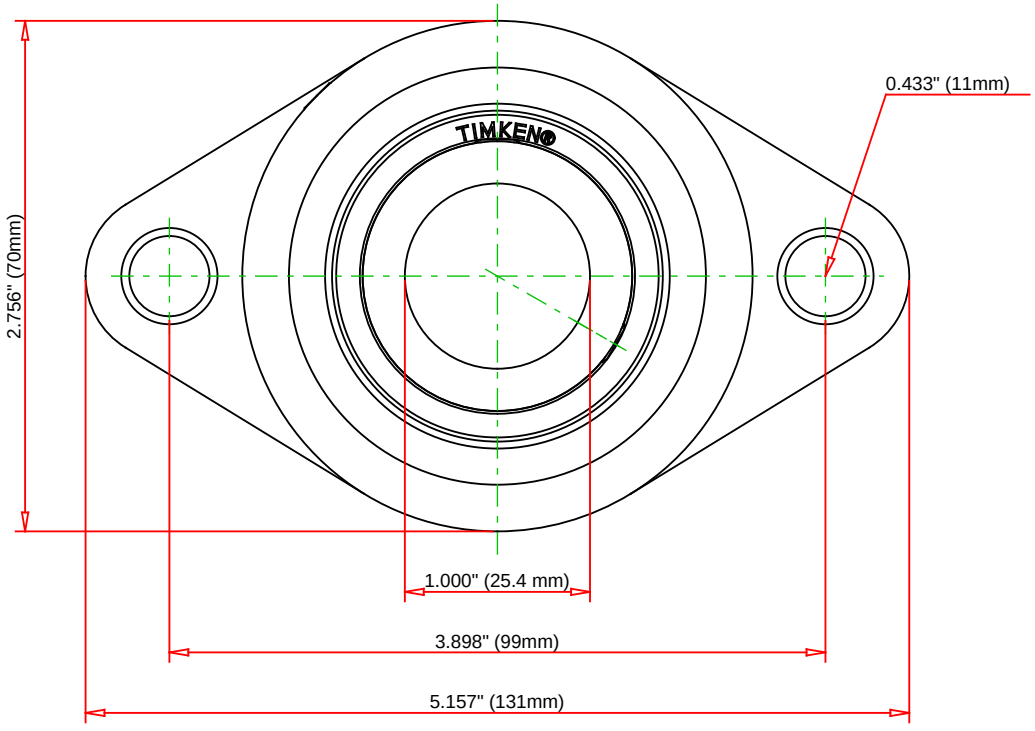

Bearing Number	SUC205-16-IP69K/F				
Load Ratings - C_r	2676	lbf	11900	N	
Load Ratings - C_{0r}	1417	lbf	6300	N	
Lubrication Type	Standard Food Safe Grease				
Housing Material	White Thermoplastic (Polymer)				

TIMKEN

THE TIMKEN COMPANY
NORTH CANTON, OHIO USA

SUCPLFL205-16-IP69K/F

Corrosion-Resistant Two-Bolt Flanged Mounted Bearings - Set Screw Locking

Every reasonable effort has been made to ensure the accuracy of the information contained in this writing, but no liability is accepted for errors, omissions or for any other reason.

FOR DISCUSSION ONLY