The Timken Company
4500 Mt Pleasant St. NW
N. Canton, OH 44720
Phone: (234) 262-3000
E-Mail: CustomerCAD@timken.com • **Web site:** www.timken.com

Part Number SUCPLFB207-20-IP69K/F, Corrosion-Resistant Three-Bolt Flanged Mounted Bearings - Set Screw Locking



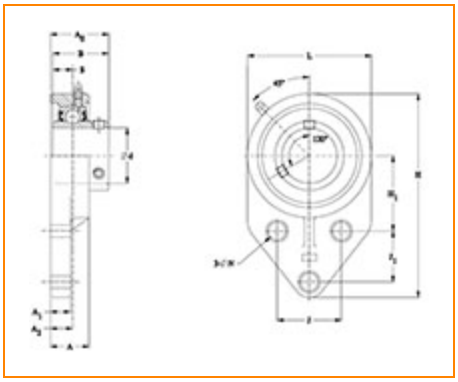

Specifications | Dimensions | Basic Load Ratings

Specifications

Bore Size	1 1/4 in
Seal Type	IP69K Seal
Housing Material	White Thermoplastic (Polymer)
Bearing Number	SUC207-20-IP69K/F
Lubrication Type	Standard Food Safe Grease
Locking Style	Set Screw Locking
Housing Construction	Three-Bolt Flange
Bearing Style	Ball Bearing

Dimensions

Total Length L	3.740 in 95.0 mm
Total Height H	6.181 in 157.0 mm
Total Width A0	1.854 in 47.1 mm
Bolt Hole Spacing J	2.000 in 50.8 mm
Bolt Hole Size N	0.512 in 13.0 mm
Flange Thickness A1	0.630 in 16.0 mm
Housing Width A	1.437 in 36.5 mm
Dimension A2	0.854 in 21.7 mm
Dimension H1	2.374 in 60.3 mm
Dimension J1	1.252 in 31.8 mm
Center of Bearing from Bearing End S	0.689 in 17.5 mm
Inner Ring Width B	1.689 in 42.9 mm

Basic Load Ratings

Dynamic Load Rating[1]	4901 lbf 21800 N
Static Load Rating	2766 lbf 12300 N

[1] Based on 90×10^6 revolutions L_{10} life, for The Timken Company life calculation method. C_{90} and C_{a90} are radial and thrust values.

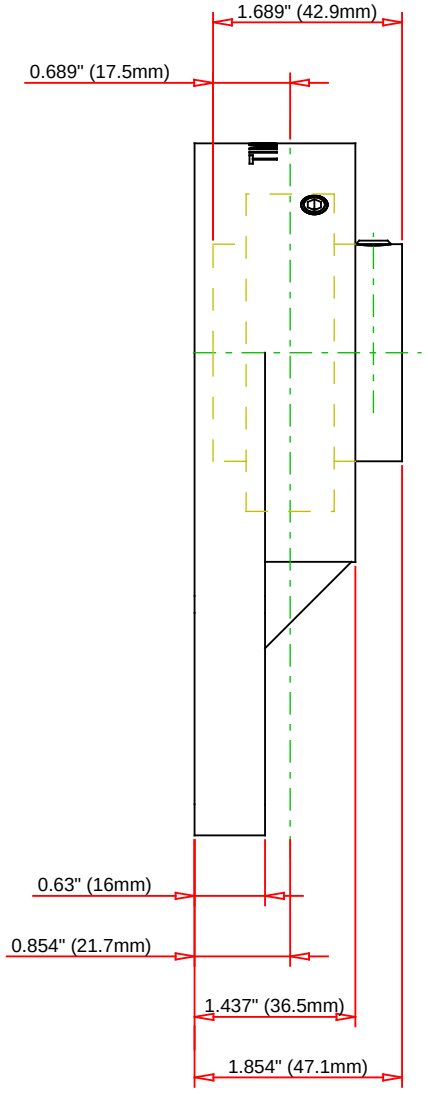

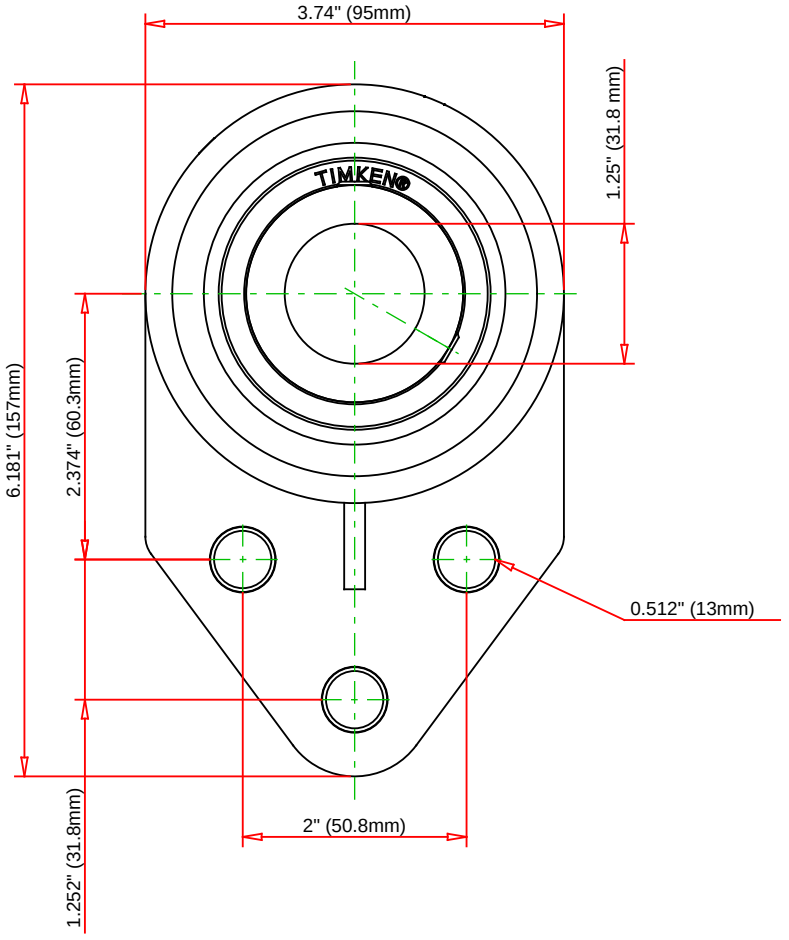

Bearing Number	SUC207-20-IP69K/F				
Load Ratings - C_r	4901	lbf	21800	N	
Load Ratings - C_{0r}	2766	lbf	12300	N	
Lubrication Type	Standard Food Safe Grease				
Housing Material	White Thermoplastic (Polymer)				

TIMKEN

THE TIMKEN COMPANY
NORTH CANTON, OHIO USA

SUCPLFB207-20-IP69K/F

Corrosion-Resistant Three-Bolt Flanged Mounted Bearings - Set Screw Locking

Every reasonable effort has been made to ensure the accuracy of the information contained in this writing, but no liability is accepted for errors, omissions or for any other reason.

FOR DISCUSSION ONLY