The Timken Company
4500 Mt Pleasant St. NW
N. Canton, OH 44720
Phone: (234) 262-3000
E-Mail: CustomerCAD@timken.com • **Web site:** www.timken.com

Part Number SUCPLFB206-19-IP69K/F, Corrosion-Resistant Three-Bolt Flanged Mounted Bearings - Set Screw Locking



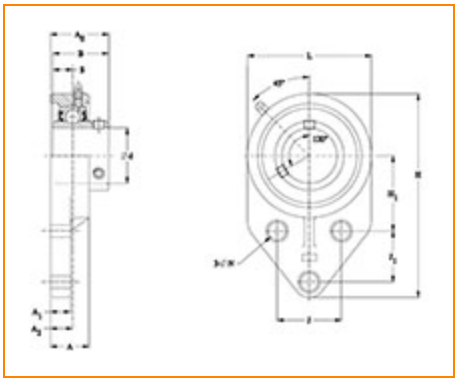

Specifications | Dimensions | Basic Load Ratings

Specifications

Bore Size	1 3/16 in
Seal Type	IP69K Seal
Housing Material	White Thermoplastic (Polymer)
Bearing Number	SUC206-19-IP69K/F
Lubrication Type	Standard Food Safe Grease
Locking Style	Set Screw Locking
Housing Construction	Three-Bolt Flange
Bearing Style	Ball Bearing

Dimensions

Total Length L	3.268 in 83.0 mm
Total Height H	5.453 in 138.5 mm
Total Width A0	1.634 in 41.5 mm
Bolt Hole Spacing J	1.874 in 47.6 mm
Bolt Hole Size N	0.433 in 11.0 mm
Flange Thickness A1	0.524 in 13.3 mm
Housing Width A	1.272 in 32.3 mm
Dimension A2	0.760 in 19.3 mm
Dimension H1	2.063 in 52.4 mm
Dimension J1	1.252 in 31.8 mm
Center of Bearing from Bearing End S	0.626 in 15.9 mm
Inner Ring Width B	1.500 in 38.1 mm

Basic Load Ratings

Dynamic Load Rating[1]	3710 lbf 16500 N
Static Load Rating	2035 lbf 9050 N

[1] Based on 90×10^6 revolutions L_{10} life, for The Timken Company life calculation method. C_{90} and C_{a90} are radial and thrust values.

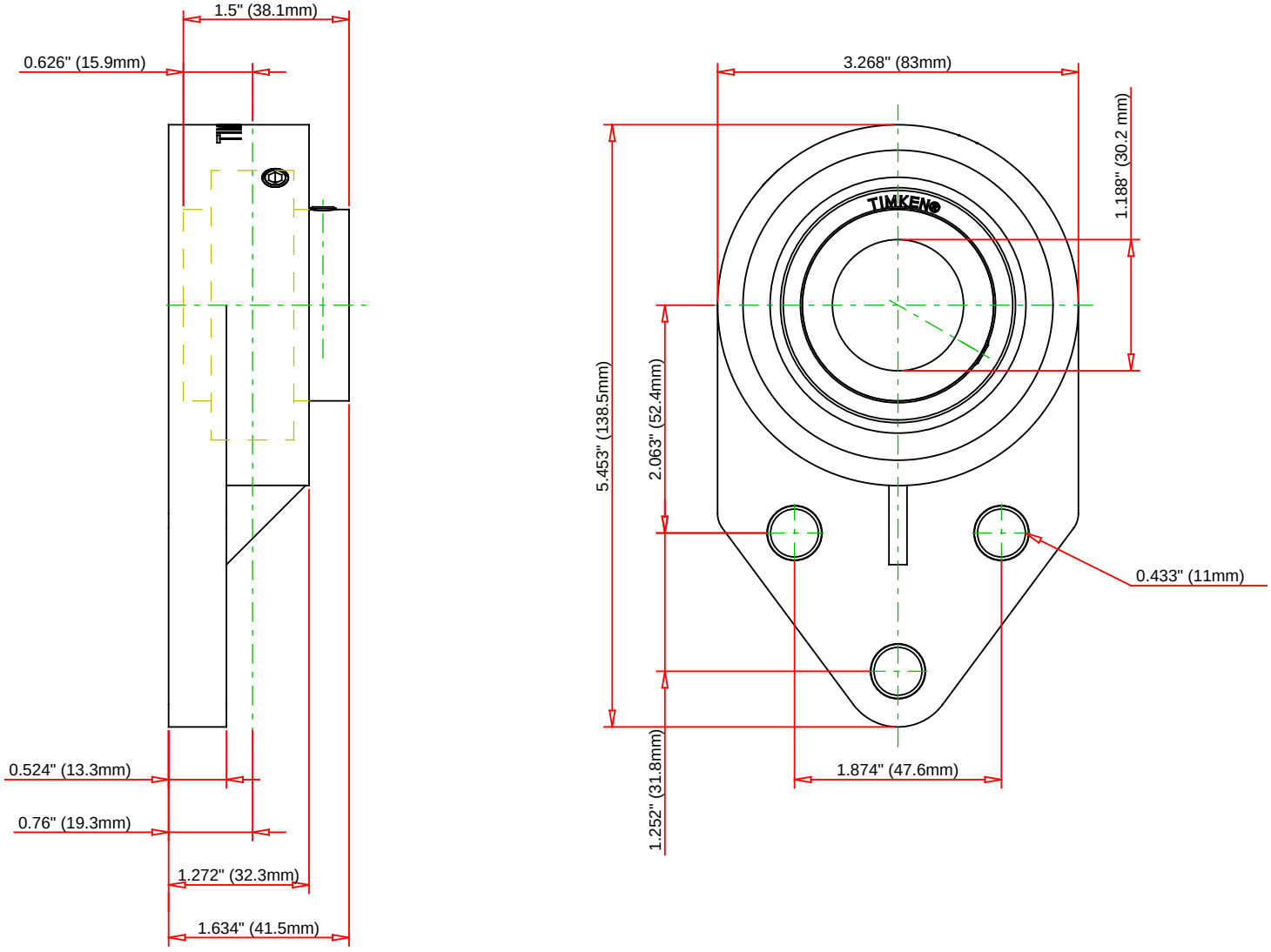

Bearing Number	SUC206-19-IP69K/F				
Load Ratings - C_r	3710	lbf	16500	N	
Load Ratings - C_{0r}	2035	lbf	9050	N	
Lubrication Type	Standard Food Safe Grease				
Housing Material	White Thermoplastic (Polymer)				

TIMKEN

THE TIMKEN COMPANY
NORTH CANTON, OHIO USA

SUCPLFB206-19-IP69K/F

Corrosion-Resistant Three-Bolt Flanged Mounted Bearings - Set Screw Locking

Every reasonable effort has been made to ensure the accuracy of the information contained in this writing, but no liability is accepted for errors, omissions or for any other reason.

FOR DISCUSSION ONLY