The Timken Company
4500 Mt Pleasant St. NW
N. Canton, OH 44720
Phone: (234) 262-3000
E-Mail: CustomerCAD@timken.com • **Web site:** www.timken.com

Part Number SUCAFL206-19-IP69K/F, Corrosion-Resistant Two-Bolt Flanged Mounted Bearings - Set Screw Locking



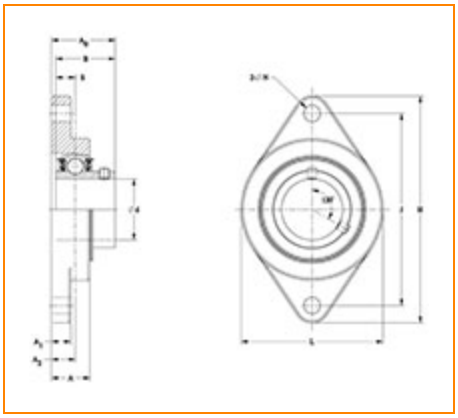

Specifications | Dimensions | Basic Load Ratings

Specifications

Bore Size	1 3/16 in
Seal Type	IP69K Seal
Housing Material	Machined Stainless Steel
Bearing Number	SUC206-19-IP69K/F
Lubrication Type	Standard Food Safe Grease
Locking Style	Set Screw Locking
Housing Construction	Two-Bolt Flange

Dimensions

Total Length H	5.590 in 142.0 mm
Total Height L	3.118 in 79.2 mm
Total Width A0	1.531 in 38.9 mm
Bolt Hole Spacing J	4.594 in 116.8 mm
Housing Width A	1.067 in 27.2 mm
Bolt Hole Size N	0.469 in 11.9 mm
Center of Bearing from Housing End A2	0.657 in 16.7 mm
Center of Bearing from Bearing End S	0.626 in 15.9 mm
Inner Ring Width B	1.500 in 38.1 mm

Basic Load Ratings

Static Load Rating	2035 lbf 9050 N
Dynamic Load Rating	3710 lbf 16500 N

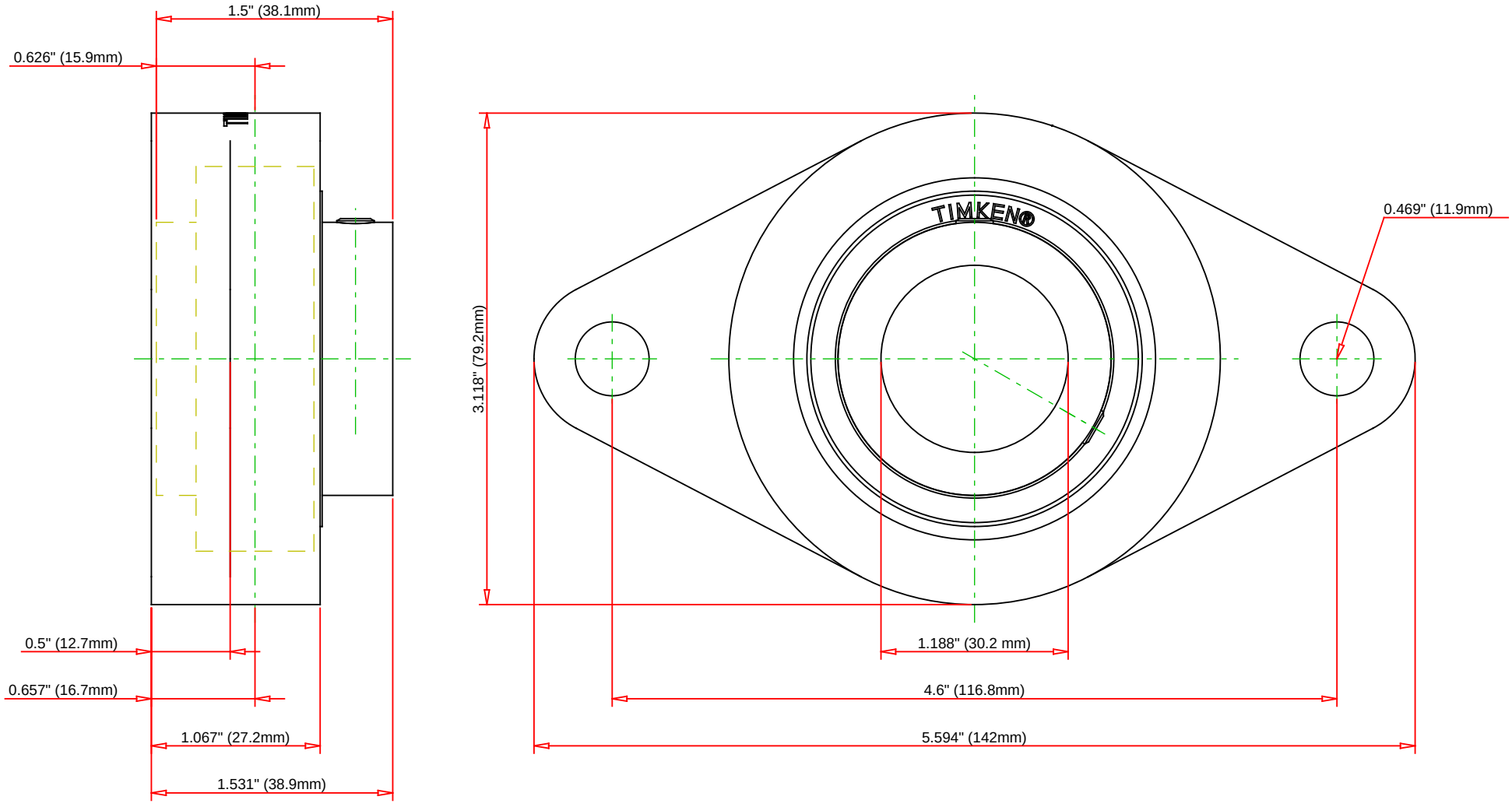

Bearing Number	SUC206-19-IP69K/F				
Load Ratings - C_r	3710	lbf	16500	N	
Load Ratings - C_{0r}	2035	lbf	9050	N	
Lubrication Type	Standard Food Safe Grease				
Housing Material	Machined Stainless Steel				

TIMKEN

THE TIMKEN COMPANY
NORTH CANTON, OHIO USA

SUCAFL206-19-IP69K/F

Corrosion-Resistant Two-Bolt Flanged Mounted Bearings - Set Screw Locking

Every reasonable effort has been made to ensure the accuracy of the information contained in this writing, but no liability is accepted for errors, omissions or for any other reason.

FOR DISCUSSION ONLY