The Timken Company
4500 Mt Pleasant St. NW
N. Canton, OH 44720
Phone: (234) 262-3000
E-Mail: CustomerCAD@timken.com • **Web site:** www.timken.com

Part Number SUCAFL204-12-IP69K/F, Corrosion-Resistant Two-Bolt Flanged Mounted Bearings - Set Screw Locking



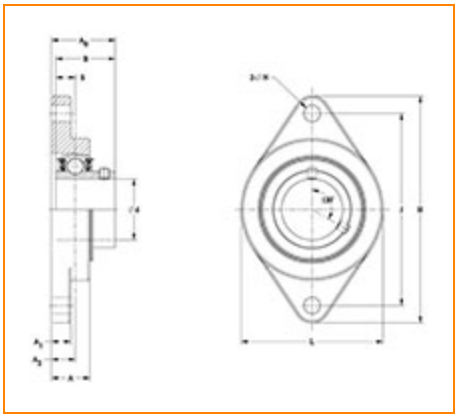

Specifications | Dimensions | Basic Load Ratings

Specifications

Bore Size	0.7500 in
Seal Type	IP69K Seal
Housing Material	Machined Stainless Steel
Bearing Number	SUC204-12-IP69K/F
Lubrication Type	Standard Food Safe Grease
Locking Style	Set Screw Locking
Housing Construction	Two-Bolt Flange

Dimensions

Total Length H	4.407 in 112.0 mm
Total Height L	2.421 in 61.5 mm
Total Width A0	1.314 in 33.4 mm
Bolt Hole Spacing J	3.532 in 89.7 mm
Housing Width A	0.950 in 24.1 mm
Bolt Hole Size N	0.406 in 10.3 mm
Center of Bearing from Housing End A2	0.594 in 15.1 mm
Center of Bearing from Bearing End S	0.500 in 12.7 mm
Inner Ring Width B	1.220 in 31.0 mm

Basic Load Ratings

Static Load Rating	1203 lbf 5350 N
Dynamic Load Rating	2451 lbf 10900 N

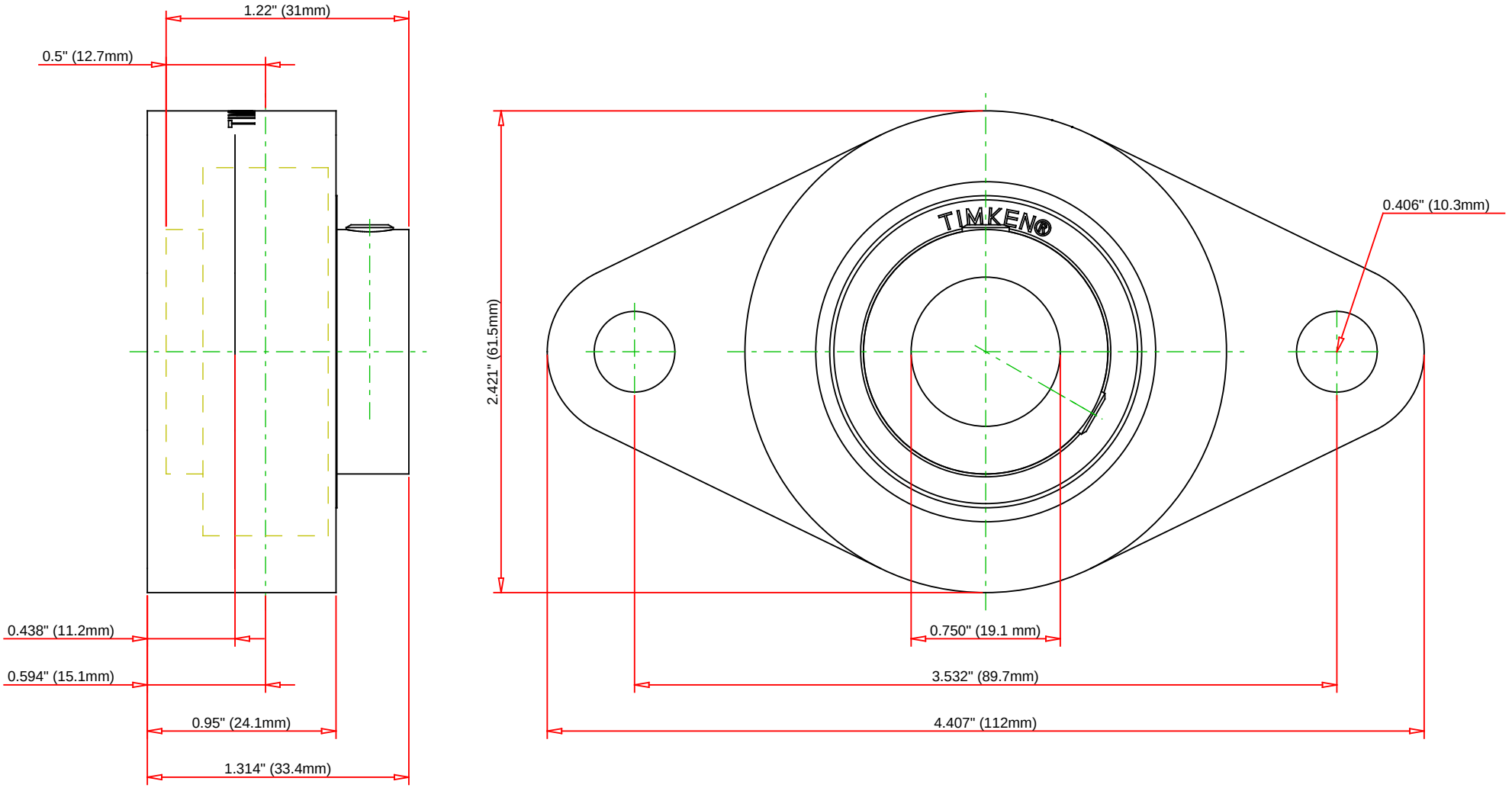

Bearing Number	SUC204-12-IP69K/F				
Load Ratings - C_r	2451	lbf	10900	N	
Load Ratings - C_{0r}	1203	lbf	5350	N	
Lubrication Type	Standard Food Safe Grease				
Housing Material	Machined Stainless Steel				

TIMKEN

THE TIMKEN COMPANY
NORTH CANTON, OHIO USA

SUCAFL204-12-IP69K/F

Corrosion-Resistant Two-Bolt Flanged Mounted Bearings - Set Screw Locking

Every reasonable effort has been made to ensure the accuracy of the information contained in this writing, but no liability is accepted for errors, omissions or for any other reason.

FOR DISCUSSION ONLY