The Timken Company
4500 Mt Pleasant St. NW
N. Canton, OH 44720
Phone: (234) 262-3000
E-Mail: CustomerCAD@timken.com • **Web site:** www.timken.com

Part Number SUCAFC210-31-IP69K/FVSL613, Corrosion-Resistant Round Flanged Mounted Bearings - Set Screw Locking



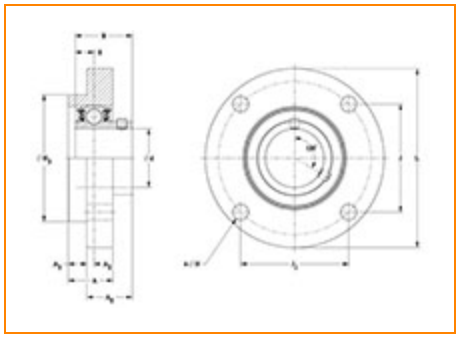

Specifications | Dimensions | Basic Load Ratings

Specifications

Bore Size	1 15/16 in
Seal Type	IP69K Seal
Housing Material	Machined Stainless Steel
Lubrication Type	Food Grade Solid Lube
Bearing Number	SUC210-31-IP69K/FVSL613
Locking Style	Set Screw Locking
Housing Construction	Round Flange
Bearing Style	Ball Bearing

Dimensions

Total Length L	6.000 in 152.4 mm
Total Height L	6.000 in 152.4 mm
Width A0	1.519 in 38.6 mm
Bolt Hole Spacing J	3.622 in 92.0 mm
Housing Width A	1.500 in 38.1 mm
Bolt Hole Size N	0.531 in 13.5 mm
Center of Bearing from Housing End A2	0.236 in 6.0 mm
Center of Bearing from Bearing End S	0.748 in 19.0 mm
Inner Ring Width B	2.031 in 51.6 mm

Basic Load Ratings

Dynamic Load Rating[1]	6700 lbf 29800 N
Static Load Rating	4182 lbf 18600 N

[1] Based on 90×10^6 revolutions L_{10} life, for The Timken Company life calculation method. C_{90} and C_{a90} are radial and thrust values.

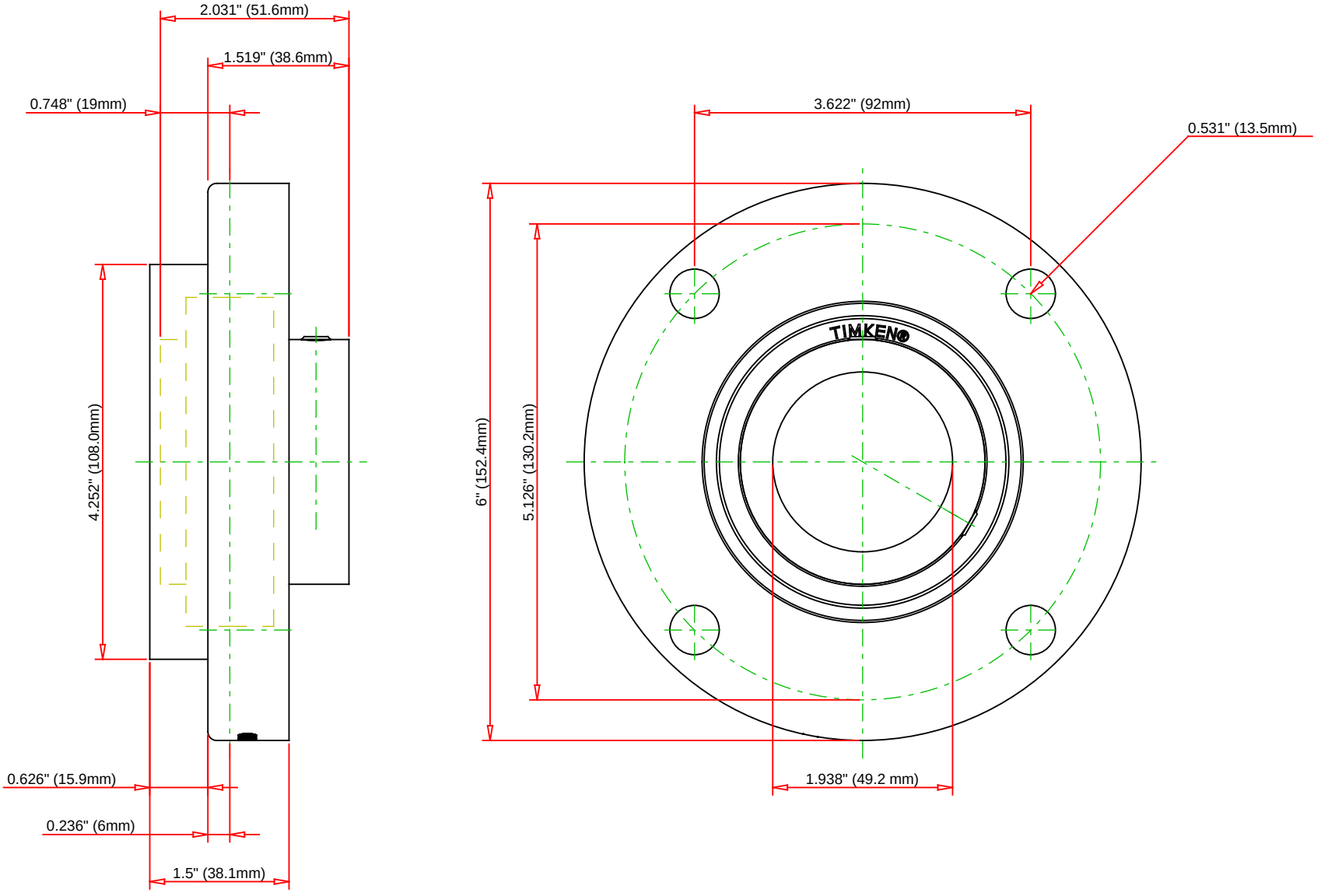

Bearing Number	SUC210-31-IP69K/FVSL613				
Load Ratings - C_r	6700	lbf	29800	N	
Load Ratings - C_{0r}	4182	lbf	18600	N	
Lubrication Type	Food Grade Solid Lube				
Housing Material	Machined Stainless Steel				

TIMKEN

THE TIMKEN COMPANY
NORTH CANTON, OHIO USA

SUCAFC210-31-IP69K/FVSL613

Corrosion-Resistant Round Flanged Mounted Bearings - Set Screw Locking

Every reasonable effort has been made to ensure the accuracy of the information contained in this writing, but no liability is accepted for errors, omissions or for any other reason.

FOR DISCUSSION ONLY