The Timken Company
4500 Mt Pleasant St. NW
N. Canton, OH 44720
Phone: (234) 262-3000
E-Mail: CustomerCAD@timken.com • **Web site:** www.timken.com

Part Number SUCAFC209-IP69K, Corrosion-Resistant Round Flanged Mounted Bearings - Set Screw Locking



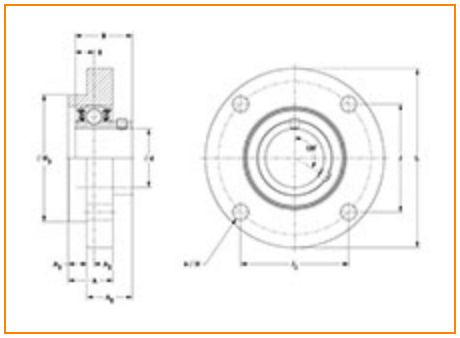

Specifications | Dimensions | Basic Load Ratings

Specifications

Bore Size	45 mm
Seal Type	IP69K Seal
Housing Material	Machined Stainless Steel
Lubrication Type	Standard Food Safe Grease
Bearing Number	SUC209-IP69K/F
Locking Style	Set Screw Locking
Housing Construction	Round Flange
Bearing Style	Ball Bearing

Dimensions

Total Length L	5.752 in 146.1 mm
Total Height L	5.752 in 146.1 mm
Width A0	1.532 in 38.9 mm
Bolt Hole Spacing J	3.358 in 85.3 mm
Housing Width A	1.437 in 36.5 mm
Bolt Hole Size N	0.531 in 13.5 mm
Center of Bearing from Housing End A2	0.343 in 8.7 mm
Center of Bearing from Bearing End S	0.748 in 19.0 mm
Inner Ring Width B	1.937 in 49.2 mm

Basic Load Ratings

Dynamic Load Rating[1]	6250 lbf 27800 N
Static Load Rating	3642 lbf 16200 N

[1] Based on 90×10^6 revolutions L_{10} life, for The Timken Company life calculation method. C_{90} and C_{a90} are radial and thrust values.

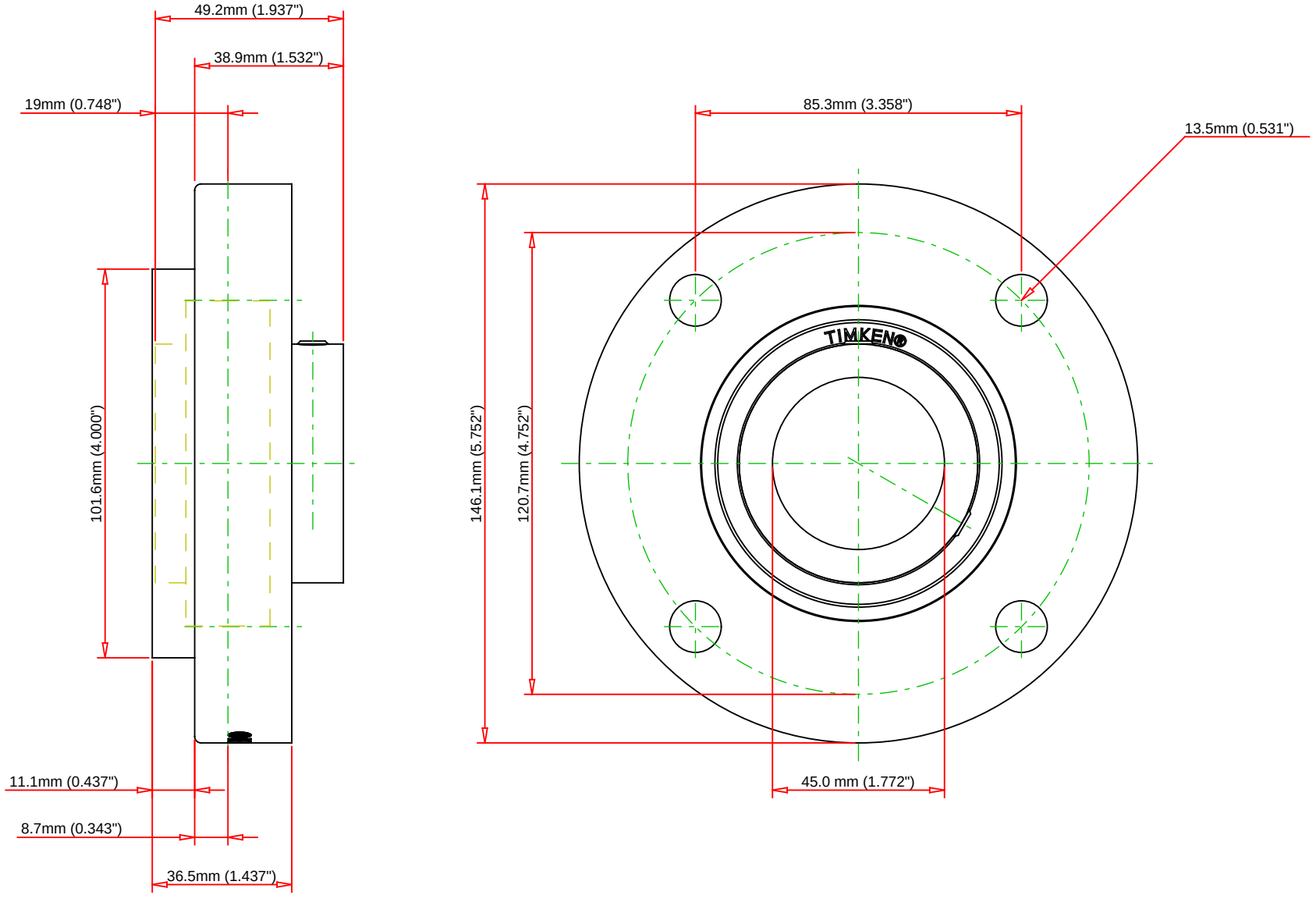

Bearing Number	SUC209-IP69K/F				
Load Ratings - C_r	6250	lbf	27800	N	
Load Ratings - C_{0r}	3642	lbf	16200	N	
Lubrication Type	Standard Food Safe Grease				
Housing Material	Machined Stainless Steel				

TIMKEN

THE TIMKEN COMPANY
NORTH CANTON, OHIO USA

SUCAFC209-IP69K

Corrosion-Resistant Round Flanged Mounted Bearings - Set Screw Locking

Every reasonable effort has been made to ensure the accuracy of the information contained in this writing, but no liability is accepted for errors, omissions or for any other reason.

FOR DISCUSSION ONLY