The Timken Company
4500 Mt Pleasant St. NW
N. Canton, OH 44720
Phone: (234) 262-3000
E-Mail: CustomerCAD@timken.com • **Web site:** www.timken.com

Part Number SUCAFC207-20-IP69K/FVSL613, Corrosion-Resistant Round Flanged Mounted Bearings - Set Screw Locking



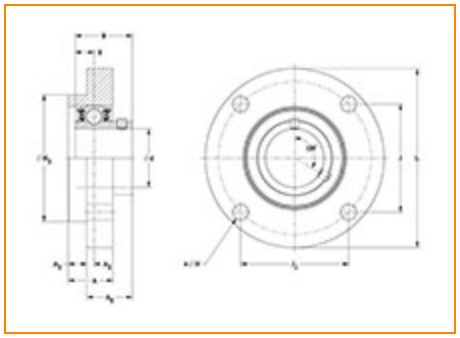

Specifications | Dimensions | Basic Load Ratings

Specifications

Bore Size	1 1/4 in
Seal Type	IP69K Seal
Housing Material	Machined Stainless Steel
Lubrication Type	Food Grade Solid Lube
Bearing Number	SUC207-20-IP69K/FVSL613
Locking Style	Set Screw Locking
Housing Construction	Round Flange
Bearing Style	Ball Bearing

Dimensions

Total Length L	5.000 in 127.0 mm
Total Height L	5.000 in 127.0 mm
Width A0	1.331 in 33.8 mm
Bolt Hole Spacing J	2.917 in 74.1 mm
Housing Width A	1.252 in 31.8 mm
Bolt Hole Size N	0.469 in 11.9 mm
Center of Bearing from Housing End A2	0.331 in 8.4 mm
Center of Bearing from Bearing End S	0.689 in 17.5 mm
Inner Ring Width B	1.689 in 42.9 mm

Basic Load Ratings

Dynamic Load Rating[1]	4901 lbf 21800 N
Static Load Rating	2766 lbf 12300 N

[1] Based on 90×10^6 revolutions L_{10} life, for The Timken Company life calculation method. C_{90} and C_{a90} are radial and thrust values.

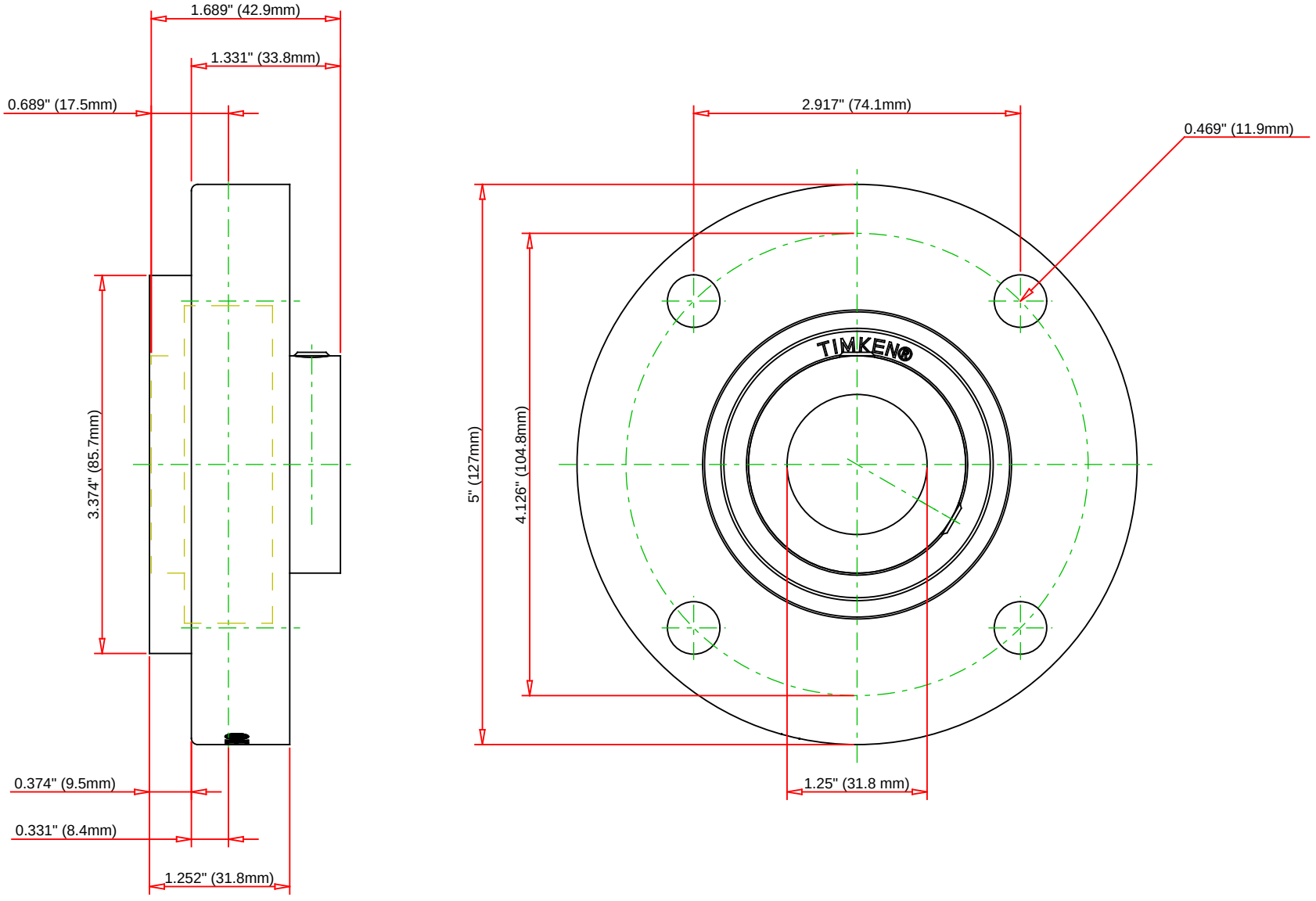

Bearing Number	SUC207-20-IP69K/FVSL613				
Load Ratings - C_r	4901	lbf	21800	N	
Load Ratings - C_{0r}	2766	lbf	12300	N	
Lubrication Type	Food Grade Solid Lube				
Housing Material	Machined Stainless Steel				

TIMKEN

THE TIMKEN COMPANY
NORTH CANTON, OHIO USA

SUCAFC207-20-IP69K/FVSL613

Corrosion-Resistant Round Flanged Mounted Bearings - Set Screw Locking

Every reasonable effort has been made to ensure the accuracy of the information contained in this writing, but no liability is accepted for errors, omissions or for any other reason.

FOR DISCUSSION ONLY