The Timken Company
4500 Mt Pleasant St. NW
N. Canton, OH 44720
Phone: (234) 262-3000
E-Mail: CustomerCAD@timken.com • **Web site:** www.timken.com

Part Number SUCBFQK206-20-IP69K, Corrosion-Resistant QuiKlean® Four-Bolt Flanged Mounted Bearings - Set Screw Locking



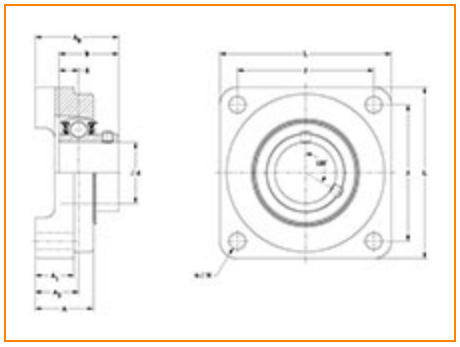

Specifications | Dimensions | Basic Load Ratings

Specifications

Bore Size	1 1/4 in
Seal Type	IP69K Seal
Housing Material	Blue Thermoset (Polymer)
Lubrication Type	Standard Food Safe Grease
Bearing Number	SUC206-20-IP69K/F
Locking Style	Set Screw Locking
Housing Construction	Four-Bolt Square Flange

Dimensions

Total Length L	4.250 in 108.0 mm
Total Height L	4.250 in 108.0 mm
Total Width A0	2.157 in 54.8 mm
Bolt Hole Spacing J	3.250 in 82.6 mm
Housing Width A	1.690 in 42.9 mm
Bolt Hole Size N	0.406 in 10.3 mm
Center of Bearing from Housing End A2	1.283 in 32.6 mm
Center of Bearing from Bearing End S	0.626 in 15.9 mm
Inner Ring Width B	1.500 in 38.1 mm

Basic Load Ratings

Dynamic Load Rating[1]	3710 lbf 16500 N
Static Load Rating	2035 lbf 9050 N

[1] Based on 90 x 10^6 revolutions L_{10} life, for The Timken Company life calculation method. C_{90} and C_{a90} are radial and thrust values.

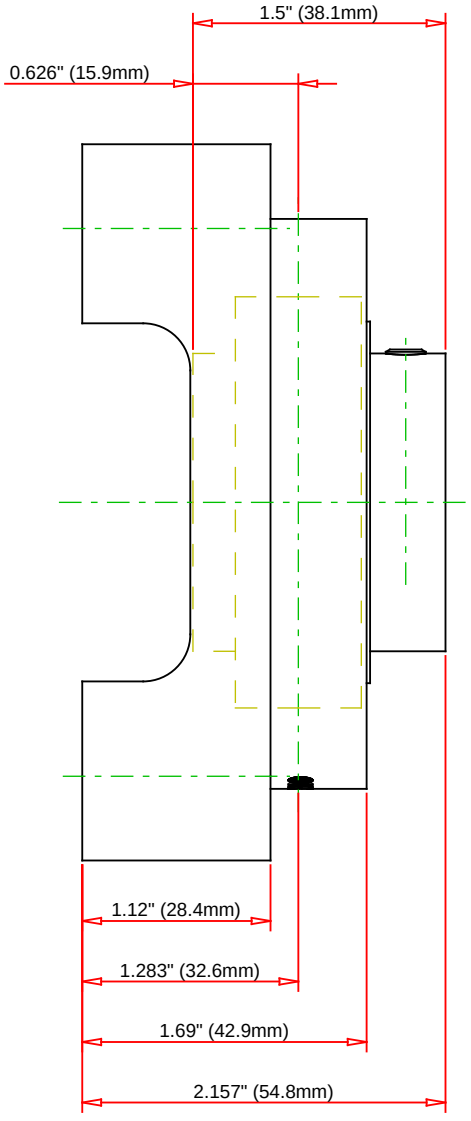

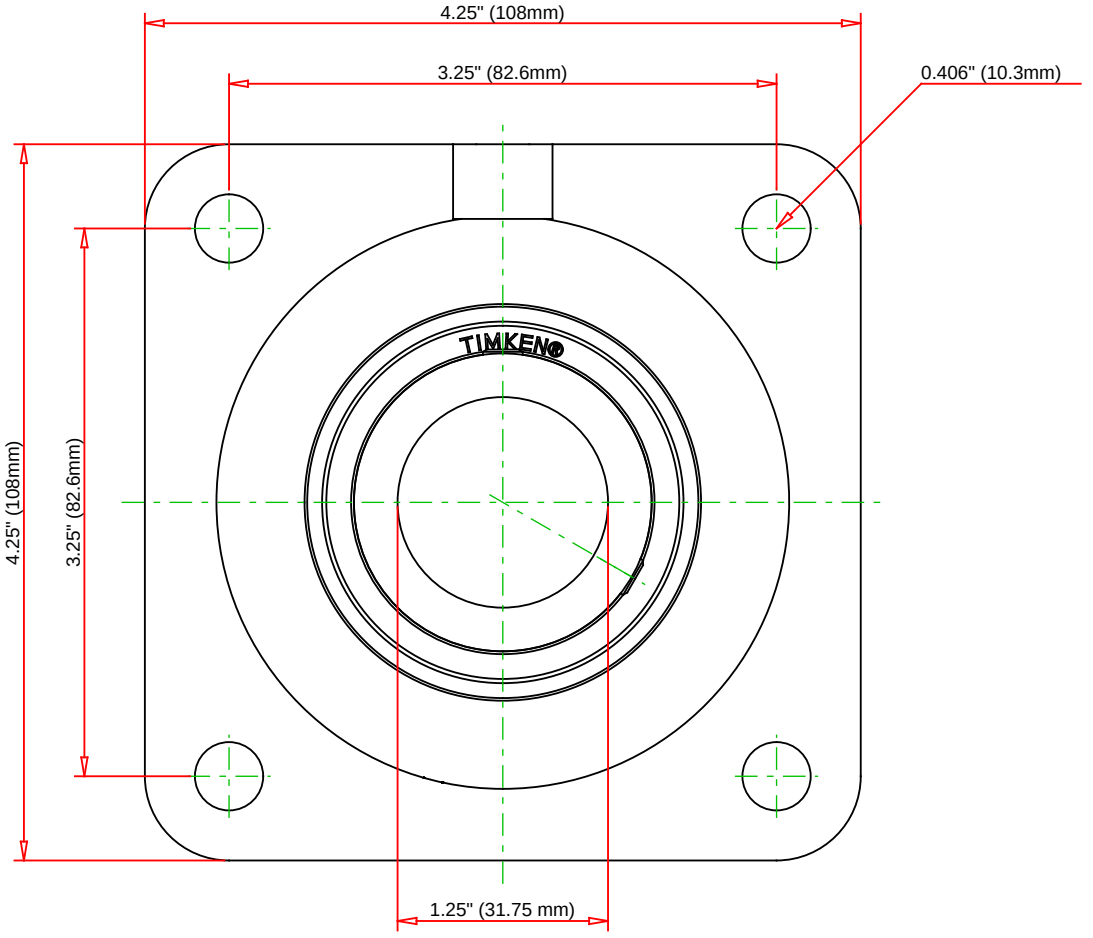

Bearing Number	SUC206-20-IP69K/F				
Load Ratings - C_r	3710	lbf	16500	N	
Load Ratings - C_{0r}	2035	lbf	9050	N	
Lubrication Type	Standard Food Safe Grease				
Housing Material	Blue Thermoset (Polymer)				

TIMKEN

THE TIMKEN COMPANY
NORTH CANTON, OHIO USA

SUCBFQK206-20-IP69K

Corrosion-Resistant QuiKlean® Four-Bolt Flanged Mounted Bearings - Set Screw Locking

Every reasonable effort has been made to ensure the accuracy of the information contained in this writing, but no liability is accepted for errors, omissions or for any other reason.

FOR DISCUSSION ONLY