The Timken Company
4500 Mt Pleasant St. NW
N. Canton, OH 44720
Phone: (234) 262-3000
E-Mail: CustomerCAD@timken.com • **Web site:** www.timken.com

Part Number SUCBF208-24-IP69K/FVSL613, Corrosion-Resistant Four-Bolt Flanged Mounted Bearings - Set Screw Locking



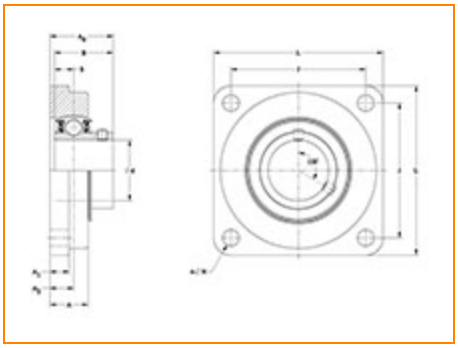

Specifications | Dimensions | Basic Load Ratings

Specifications

Bore Size	1 1/2 in
Seal Type	IP69K Seal
Housing Material	Blue Thermoset (Polymer)
Lubrication Type	Food Grade Solid Lube
Bearing Number	SUC208-24-IP69K/FVSL613
Locking Style	Set Screw Locking
Housing Construction	Four-Bolt Square Flange
Bearing Style	Ball Bearing

Dimensions

Total Length L	5.125 in 130.3 mm
Total Width A0	1.957 in 49.7 mm
Total Height L	5.125 in 130.3 mm
Bolt Hole Spacing J	4.000 in 101.6 mm
Housing Width A	1.240 in 31.5 mm
Bolt Hole Size N	0.531 in 13.5 mm
Center of Bearing from Housing End A2	0.768 in 19.5 mm
Center of Bearing from Bearing End S	0.748 in 19.0 mm
Inner Ring Width B	1.937 in 49.2 mm

Basic Load Ratings

Dynamic Load Rating[1]	5576 lbf 24800 N
Static Load Rating	3215 lbf 14300 N

[1] Based on 90×10^6 revolutions L_{10} life, for The Timken Company life calculation method. C_{90} and C_{a90} are radial and thrust values.

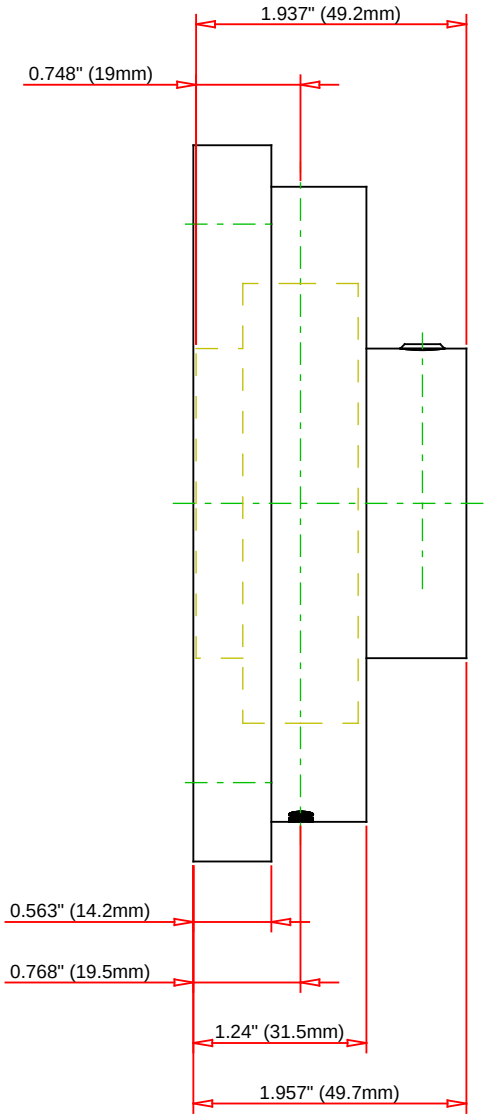

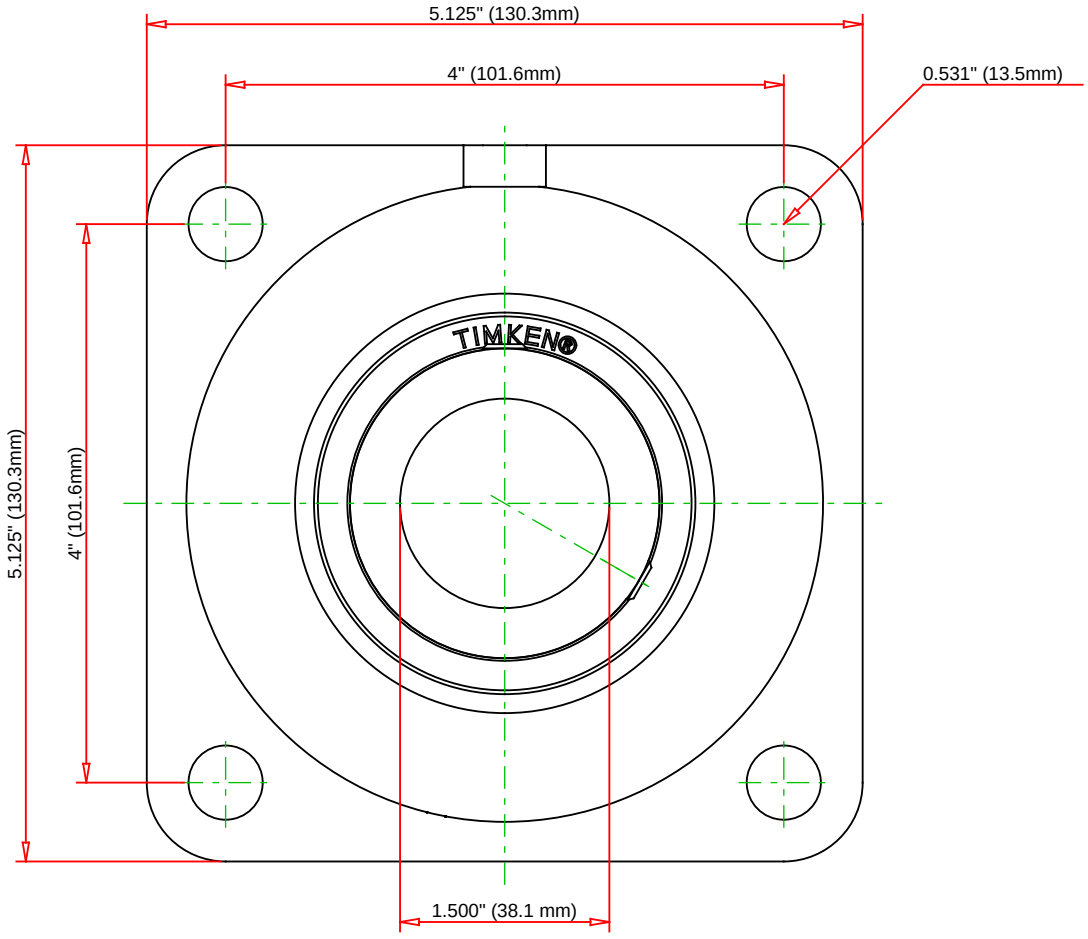

Bearing Number	SUC208-24-IP69K/FVSL613				
Load Ratings - C_r	5576	lbf	24800	N	
Load Ratings - C_{0r}	3215	lbf	14300	N	
Lubrication Type	Food Grade Solid Lube				
Housing Material	Blue Thermoset (Polymer)				

TIMKEN

THE TIMKEN COMPANY
NORTH CANTON, OHIO USA

SUCBF208-24-IP69K/FVSL613

Corrosion-Resistant Four-Bolt Flanged Mounted Bearings - Set Screw Locking

Every reasonable effort has been made to ensure the accuracy of the information contained in this writing, but no liability is accepted for errors, omissions or for any other reason.

FOR DISCUSSION ONLY