The Timken Company
4500 Mt Pleasant St. NW
N. Canton, OH 44720
Phone: (234) 262-3000
E-Mail: CustomerCAD@timken.com • **Web site:** www.timken.com

Part Number SUCBFLQK204-12-IP69K, Corrosion-Resistant QuiKlean® Two-Bolt Flanged Mounted Bearings - Set Screw Locking



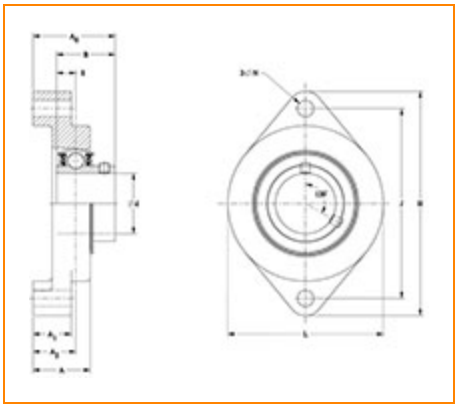

Specifications | Basic Load Ratings | Dimensions

Specifications

Bore Size	0.7500 in
Seal Type	IP69K Seal
Housing Material	Blue Thermoset (Polymer)
Bearing Number	SUC204-12-IP69K/F
Lubrication Type	Standard Food Safe Grease
Locking Style	Set Screw Locking
Housing Construction	Two-Bolt Flange
Bearing Style	Ball Bearing

Basic Load Ratings

Dynamic Load Rating[1]	2451 lbf 10900 N
Static Load Rating	1203 lbf 5350 N

Dimensions

Total Length H	4.407 in 112.0 mm
Total Height L	2.690 in 68.3 mm
Total Width A0	1.940 in 49.3 mm
Bolt Hole Spacing J	3.532 in 89.7 mm
Base Thickness A1	1.059 in 26.9 mm
Housing Width A	1.563 in 39.7 mm
Bolt Hole Size N	0.406 in 10.3 mm
Center of Bearing from Housing End A2	1.22 in 31 mm
Center of Bearing from Bearing End S	0.5 in 12.7 mm
Inner Ring Width B	1.220 in 31.0 mm

[1] Based on 90×10^6 revolutions L_{10} life, for The Timken Company life calculation method. C_{90} and C_{a90} are radial and thrust values.

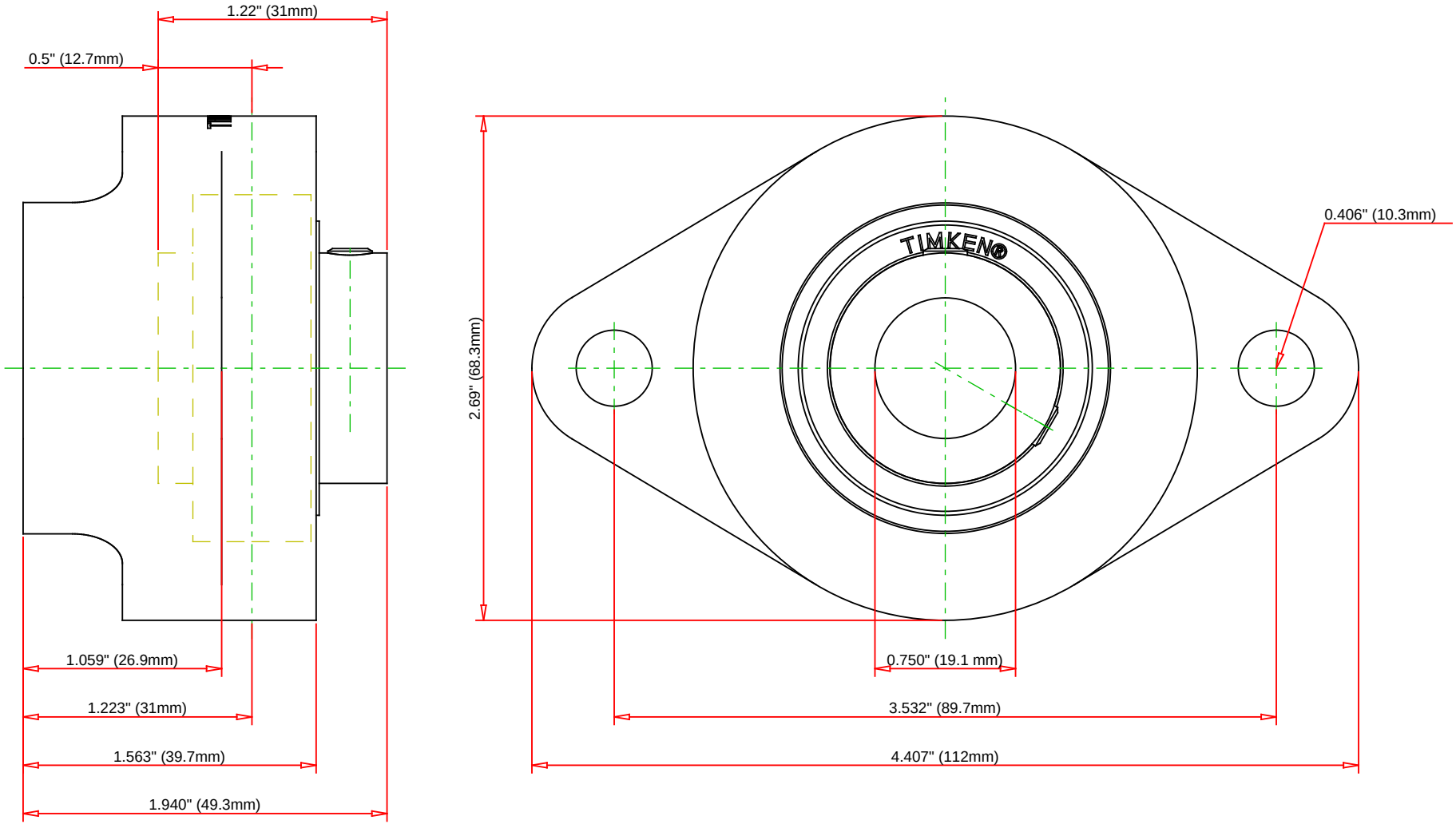

Bearing Number	SUC204-12-IP69K/F				
Load Ratings - C_r	2451	lbf	10900	N	
Load Ratings - C_{0r}	1203	lbf	5350	N	
Lubrication Type	Standard Food Safe Grease				
Housing Material	Blue Thermoset (Polymer)				

TIMKEN

THE TIMKEN COMPANY
NORTH CANTON, OHIO USA

SUCBFLQK204-12-IP69K

Corrosion-Resistant QuiKlean® Two-Bolt Flanged Mounted Bearings - Set Screw Locking

Every reasonable effort has been made to ensure the accuracy of the information contained in this writing, but no liability is accepted for errors, omissions or for any other reason.

FOR DISCUSSION ONLY