The Timken Company
4500 Mt Pleasant St. NW
N. Canton, OH 44720
Phone: (234) 262-3000
E-Mail: CustomerCAD@timken.com • **Web site:** www.timken.com

Part Number SUCBTBYM210-31-IP69K/F, Corrosion-Resistant Tapped Base Mounted Bearings - Set Screw Locking

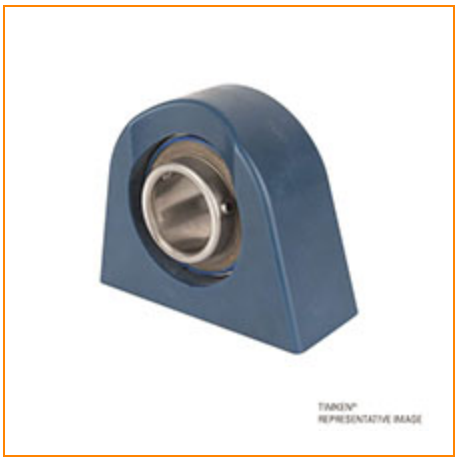

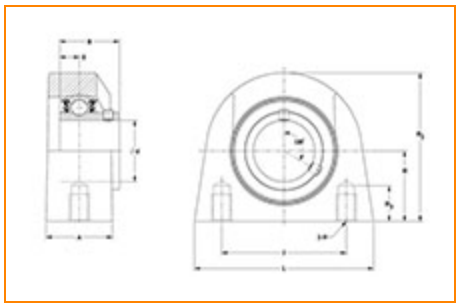

Specifications | Dimensions | Basic Load Ratings

Specifications

Bore Size	1 15/16 in
Seal Type	IP69K Seal
Housing Material	Blue Thermoset (Polymer)
Bearing Number	SUC210-31-IP69K/F
Lubrication Type	Standard Food Safe Grease
Locking Style	Set Screw Locking
Housing Construction	Tapped Base

Dimensions

Housing Width A	2.130 in 54.0 mm
Total Length L	5.750 in 146.1 mm
Total Height H2	4.750 in 120.7 mm
Thread Length H3	1.142 in 29.0 mm
Bolt Hole Spacing J	4.000 in 101.6 mm
Base to Center Height H	2.250 in 57.2 mm
Center of Bearing from Bearing End S	0.748 in 19.0 mm
Inner Ring Width B	2.031 in 51.6 mm

Basic Load Ratings

Dynamic Load Rating[1]	6700 lbf 29800 N
Static Load Rating	4182 lbf 18600 N

[1] Based on 90 x 10^6 revolutions L_{10} life, for The Timken Company life calculation method. C_{90} and C_{a90} are radial and thrust values.

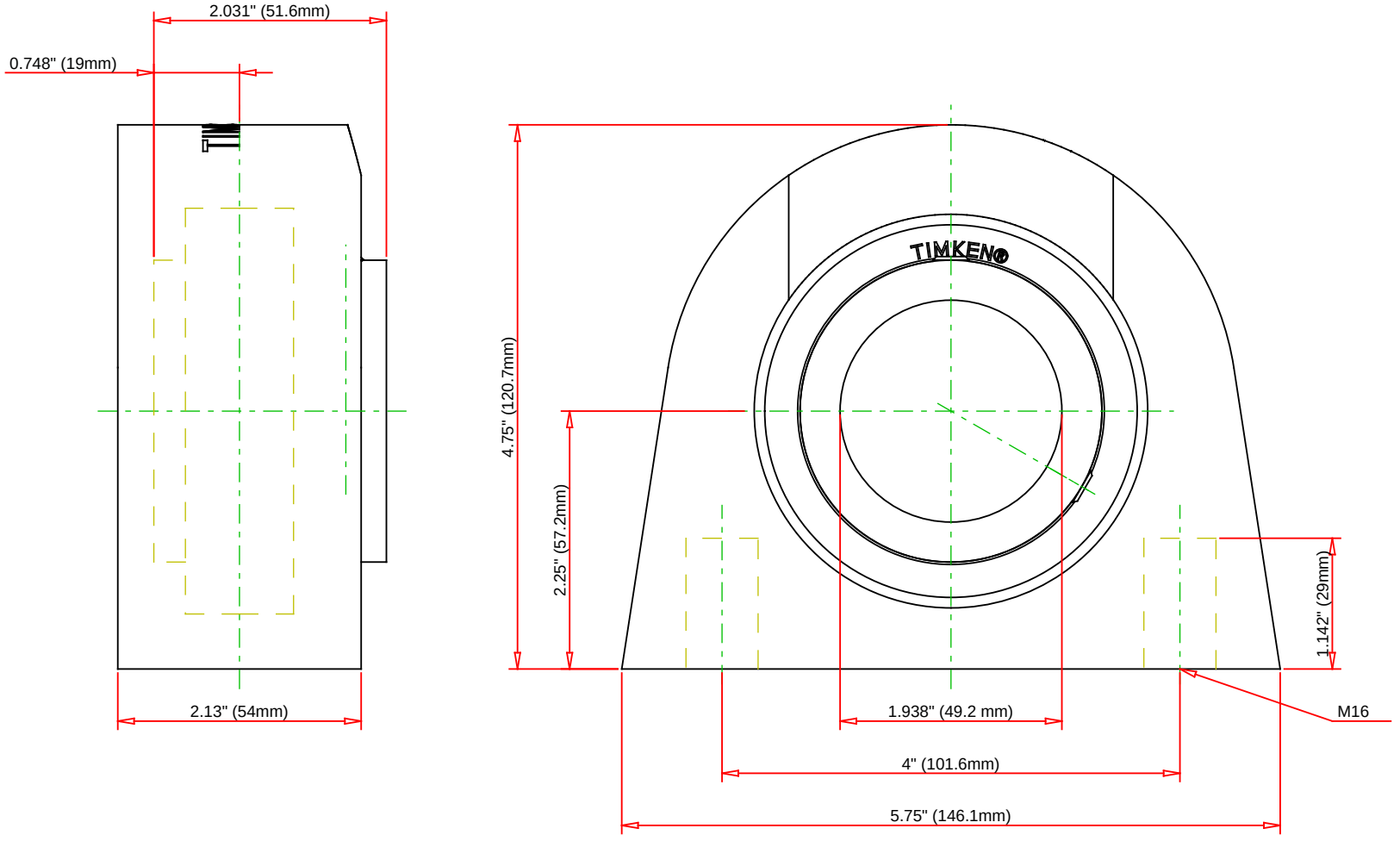

Bearing Number	SUC210-31-IP69K/F				
Load Ratings - C_r	6700	lbf	29800	N	
Load Ratings - C_{0r}	4182	lbf	18600	N	
Lubrication Type	Standard Food Safe Grease				
Housing Material	Blue Thermoset (Polymer)				

TIMKEN

THE TIMKEN COMPANY
NORTH CANTON, OHIO USA

SUCBTBYM210-31-IP69K/F

Corrosion-Resistant Tapped Base Mounted Bearings - Set Screw Locking

Every reasonable effort has been made to ensure the accuracy of the information contained in this writing, but no liability is accepted for errors, omissions or for any other reason.

FOR DISCUSSION ONLY