The Timken Company
4500 Mt Pleasant St. NW
N. Canton, OH 44720
Phone: (234) 262-3000
E-Mail: CustomerCAD@timken.com • **Web site:** www.timken.com

Part Number SUCBFL210-32-IP69K/F, Corrosion-Resistant Two-Bolt Flanged Mounted Bearings - Set Screw Locking



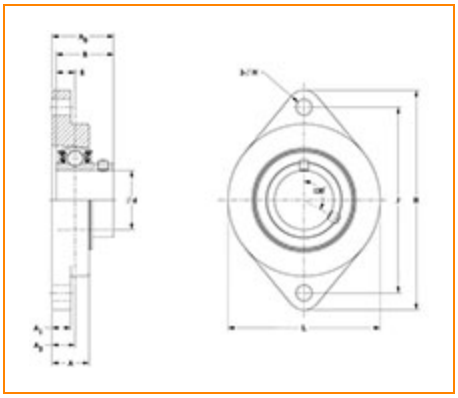

Specifications | Dimensions | Basic Load Ratings

Specifications

Bore Size	2 in
Seal Type	IP69K Seal
Housing Material	Blue Thermoset (Polymer)
Bearing Number	SUC210-32-IP69K/F
Lubrication Type	Standard Food Safe Grease
Locking Style	Set Screw Locking
Housing Construction	Two-Bolt Flange

Dimensions

Total Length H	7.313 in 185.7 mm
Total Height L	5.060 in 128.5 mm
Total Width A0	2.055 in 52.2 mm
Bolt Hole Spacing J	6.188 in 157.2 mm
Housing Width A	1.240 in 31.5 mm
Bolt Hole Size N	0.531 in 13.5 mm
Center of Bearing from Housing End A2	0.772 in 19.6 mm
Center of Bearing from Bearing End S	0.748 in 19.0 mm
Inner Ring Width B	2.031 in 51.6 mm

Basic Load Ratings

Static Load Rating	4182 lbf 18600 N
Dynamic Load Rating	6700 lbf 29800 N

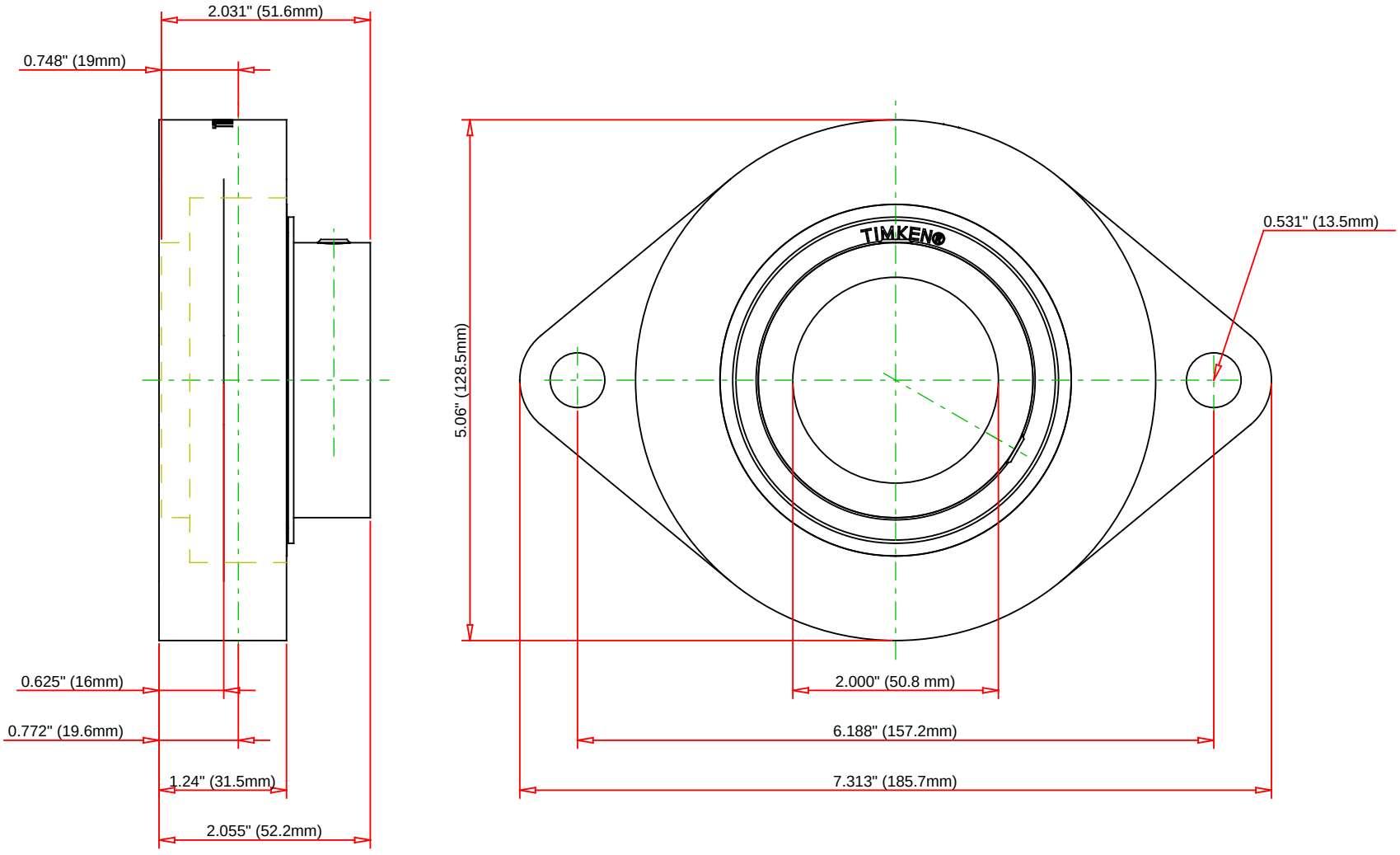

Bearing Number	SUC210-32-IP69K/F				
Load Ratings - C_r	6700	lbf	29800	N	
Load Ratings - C_{0r}	4182	lbf	18600	N	
Lubrication Type	Standard Food Safe Grease				
Housing Material	Blue Thermoset (Polymer)				

TIMKEN

THE TIMKEN COMPANY
NORTH CANTON, OHIO USA

SUCBFL210-32-IP69K/F

Corrosion-Resistant Two-Bolt Flanged Mounted Bearings - Set Screw Locking

Every reasonable effort has been made to ensure the accuracy of the information contained in this writing, but no liability is accepted for errors, omissions or for any other reason.

FOR DISCUSSION ONLY