The Timken Company
4500 Mt Pleasant St. NW
N. Canton, OH 44720
Phone: (234) 262-3000
E-Mail: CustomerCAD@timken.com • **Web site:** www.timken.com

Part Number SUCBF205-16-IP69K/F, Corrosion-Resistant Four-Bolt Flanged Mounted Bearings - Set Screw Locking



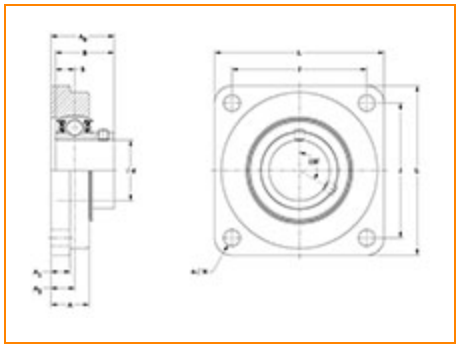

Specifications | Dimensions | Basic Load Ratings

Specifications

Bore Size	1.0000 in
Seal Type	IP69K Seal
Housing Material	Blue Thermoset (Polymer)
Lubrication Type	Standard Food Safe Grease
Bearing Number	SUC205-16-IP69K/F
Locking Style	Set Screw Locking
Housing Construction	Four-Bolt Square Flange
Bearing Style	Ball Bearing

Dimensions

Total Length L	3.750 in 95.3 mm
Total Width A0	1.414 in 35.9 mm
Total Height L	3.750 in 95.3 mm
Bolt Hole Spacing J	2.750 in 69.9 mm
Housing Width A	0.990 in 25.1 mm
Bolt Hole Size N	0.469 in 11.9 mm
Center of Bearing from Housing End A2	0.634 in 16.1 mm
Center of Bearing from Bearing End S	0.563 in 14.3 mm
Inner Ring Width B	1.343 in 34.1 mm

Basic Load Ratings

Dynamic Load Rating[1]	2676 lbf 11900 N
Static Load Rating	1417 lbf 6300 N

[1] Based on 90×10^6 revolutions L_{10} life, for The Timken Company life calculation method. C_{90} and C_{a90} are radial and thrust values.

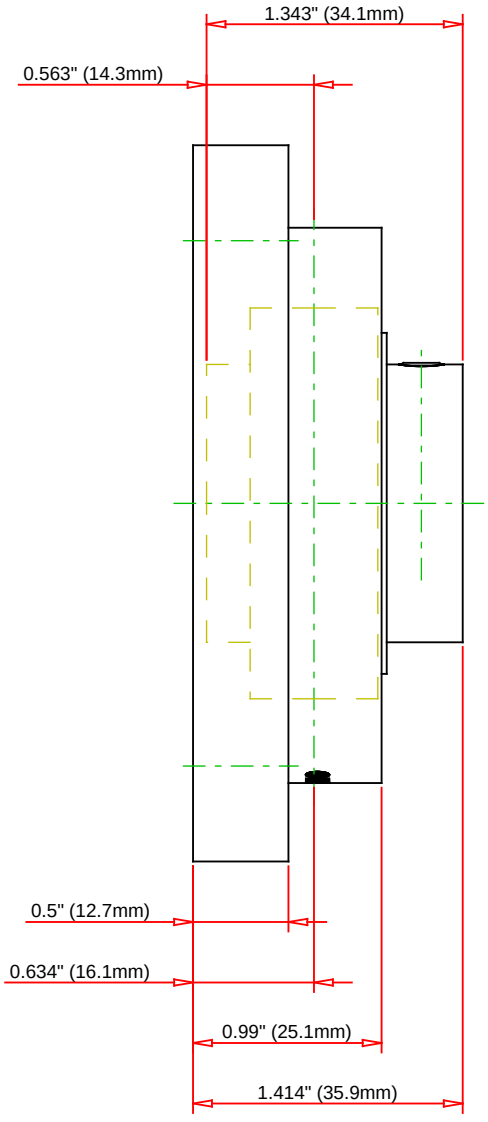

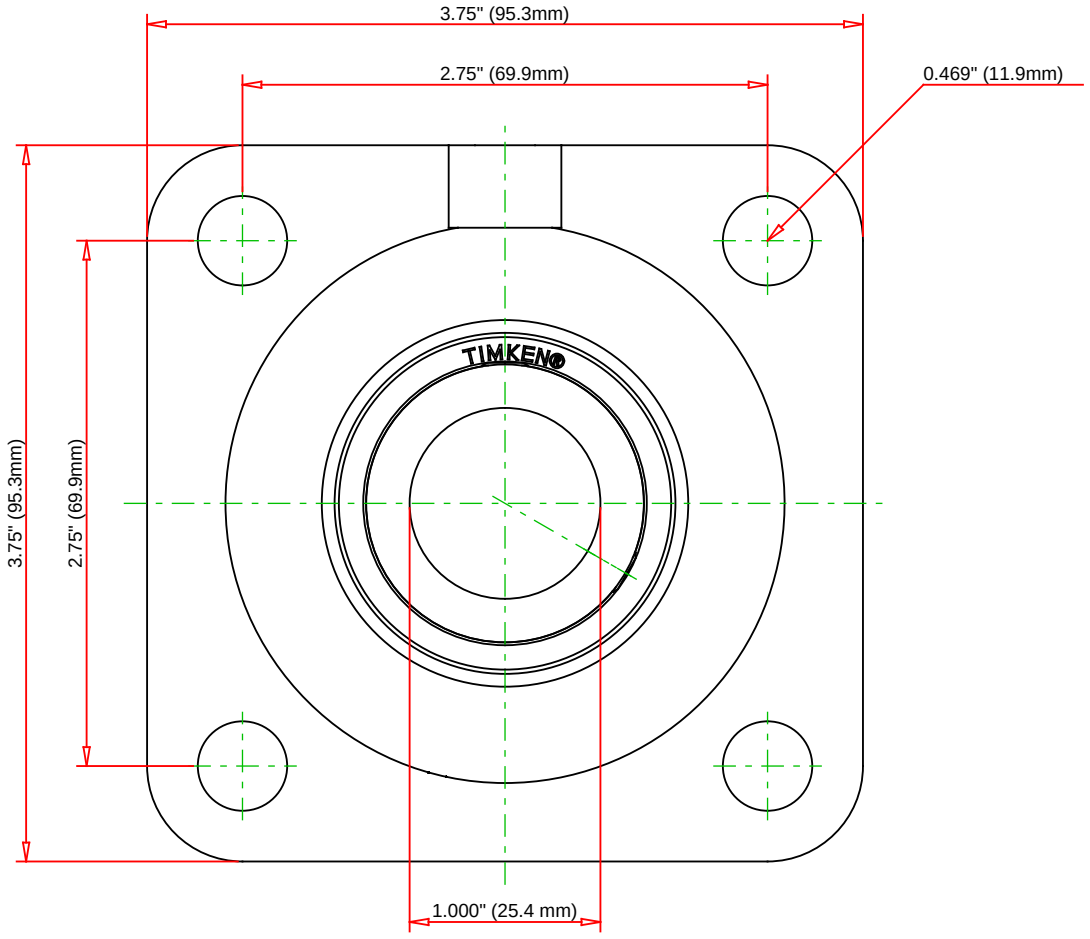

Bearing Number	SUC205-16-IP69K/F				
Load Ratings - C_r	2676	lbf	11900	N	
Load Ratings - C_{0r}	1417	lbf	6300	N	
Lubrication Type	Standard Food Safe Grease				
Housing Material	Blue Thermoset (Polymer)				

TIMKEN

THE TIMKEN COMPANY
NORTH CANTON, OHIO USA

SUCBF205-16-IP69K/F

Corrosion-Resistant Four-Bolt Flanged Mounted Bearings - Set Screw Locking

Every reasonable effort has been made to ensure the accuracy of the information contained in this writing, but no liability is accepted for errors, omissions or for any other reason.

FOR DISCUSSION ONLY