The Timken Company
4500 Mt Pleasant St. NW
N. Canton, OH 44720
Phone: (234) 262-3000
E-Mail: CustomerCAD@timken.com • **Web site:** www.timken.com

Part Number SUCBTBYM207-20-IP69K/FVSL613, Corrosion-Resistant Tapped Base Mounted Bearings - Set Screw Locking

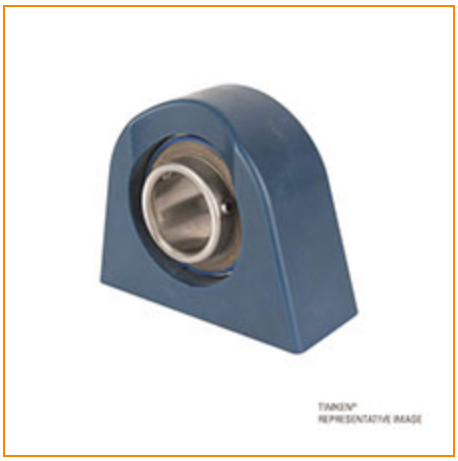

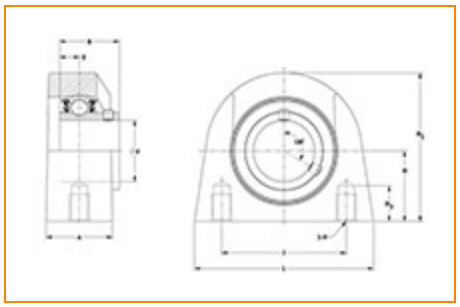

Specifications | Dimensions | Basic Load Ratings

Specifications

Bore Size	1 1/4 in
Seal Type	IP69K Seal
Housing Material	Blue Thermoset (Polymer)
Bearing Number	SUC207-20-IP69K/FVSL613
Lubrication Type	Food Grade Solid Lube
Locking Style	Set Screw Locking
Housing Construction	Tapped Base

Dimensions

Housing Width A	1.750 in 44.5 mm
Total Length L	4.500 in 114.3 mm
Total Height H2	3.880 in 98.6 mm
Thread Length H3	0.803 in 20.4 mm
Bolt Hole Spacing J	3.250 in 82.6 mm
Base to Center Height H	1.882 in 47.8 mm
Center of Bearing from Bearing End S	0.689 in 17.5 mm
Inner Ring Width B	1.689 in 42.9 mm

Basic Load Ratings

Dynamic Load Rating[1]	4901 lbf 21800 N
Static Load Rating	2766 lbf 12300 N

[1] Based on 90×10^6 revolutions L_{10} life, for The Timken Company life calculation method. C_{90} and C_{a90} are radial and thrust values.

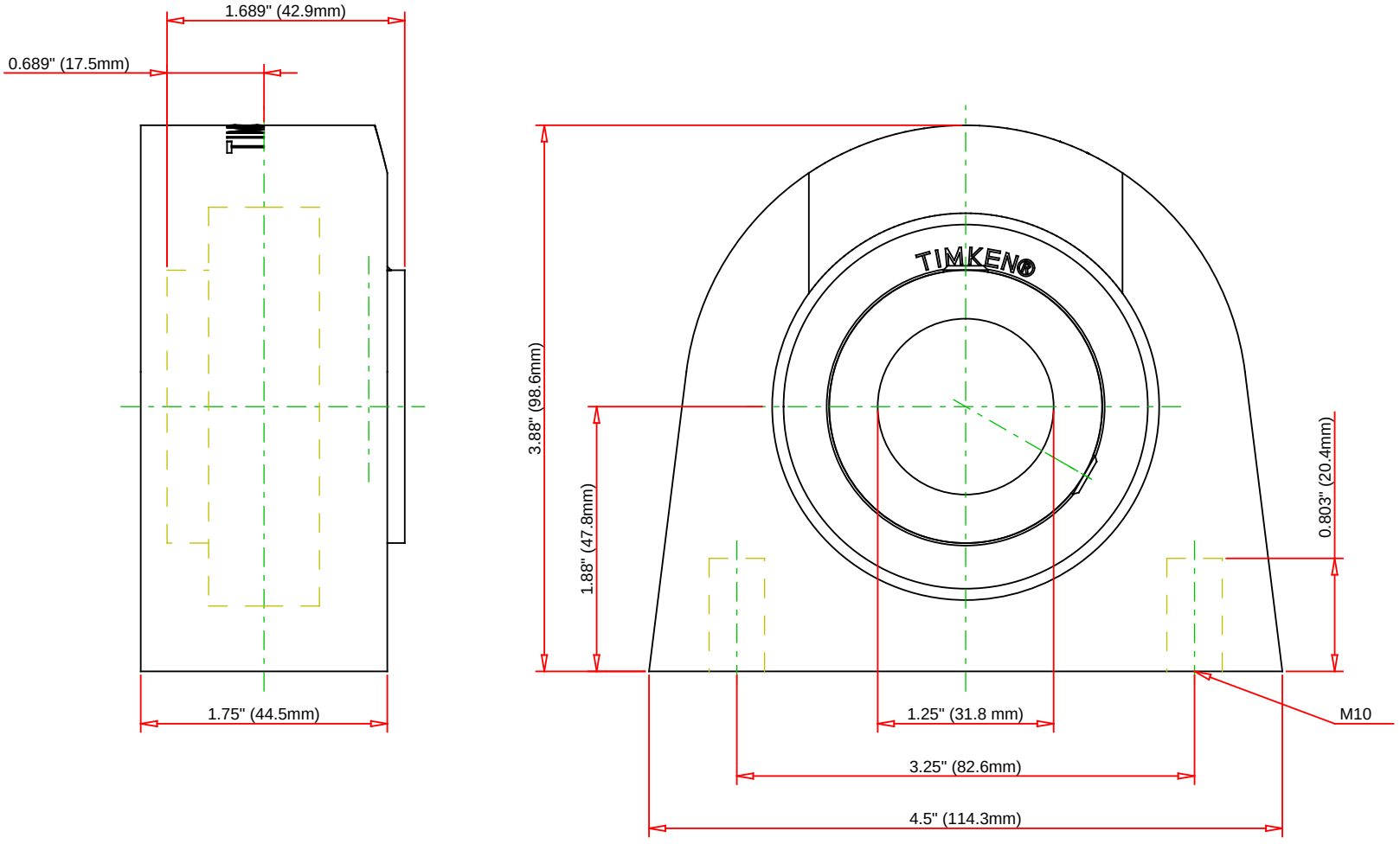

Bearing Number	SUC207-20-IP69K/FVSL613				
Load Ratings - C_r	4901	lbf	21800	N	
Load Ratings - C_{0r}	2766	lbf	12300	N	
Lubrication Type	Food Grade Solid Lube				
Housing Material	Blue Thermoset (Polymer)				

TIMKEN

THE TIMKEN COMPANY
NORTH CANTON, OHIO USA

SUCBTBYM207-20-IP69K/FVSL613

Corrosion-Resistant Tapped Base Mounted Bearings - Set Screw Locking

Every reasonable effort has been made to ensure the accuracy of the information contained in this writing, but no liability is accepted for errors, omissions or for any other reason.

FOR DISCUSSION ONLY