The Timken Company
4500 Mt Pleasant St. NW
N. Canton, OH 44720
Phone: (234) 262-3000
E-Mail: CustomerCAD@timken.com • **Web site:** www.timken.com

Part Number SUCBFL208-24-IP69K/F, Corrosion-Resistant Two-Bolt Flanged Mounted Bearings - Set Screw Locking



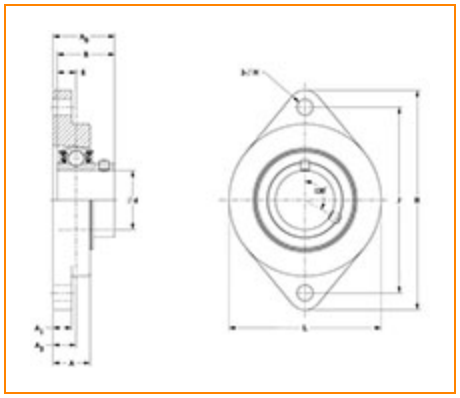

Specifications | Dimensions | Basic Load Ratings

Specifications

Bore Size	1 1/2 in
Seal Type	IP69K Seal
Housing Material	Blue Thermoset (Polymer)
Bearing Number	SUC208-24-IP69K/F
Lubrication Type	Standard Food Safe Grease
Locking Style	Set Screw Locking
Housing Construction	Two-Bolt Flange

Dimensions

Total Length H	6.781 in 172.2 mm
Total Height L	4.560 in 115.8 mm
Total Width A0	1.957 in 49.7 mm
Bolt Hole Spacing J	5.656 in 143.8 mm
Housing Width A	1.240 in 31.5 mm
Bolt Hole Size N	0.531 in 13.5 mm
Center of Bearing from Housing End A2	0.768 in 19.5 mm
Center of Bearing from Bearing End S	0.748 in 19.0 mm
Inner Ring Width B	1.937 in 49.2 mm

Basic Load Ratings

Static Load Rating	3215 lbf 14300 N
Dynamic Load Rating	5576 lbf 24800 N

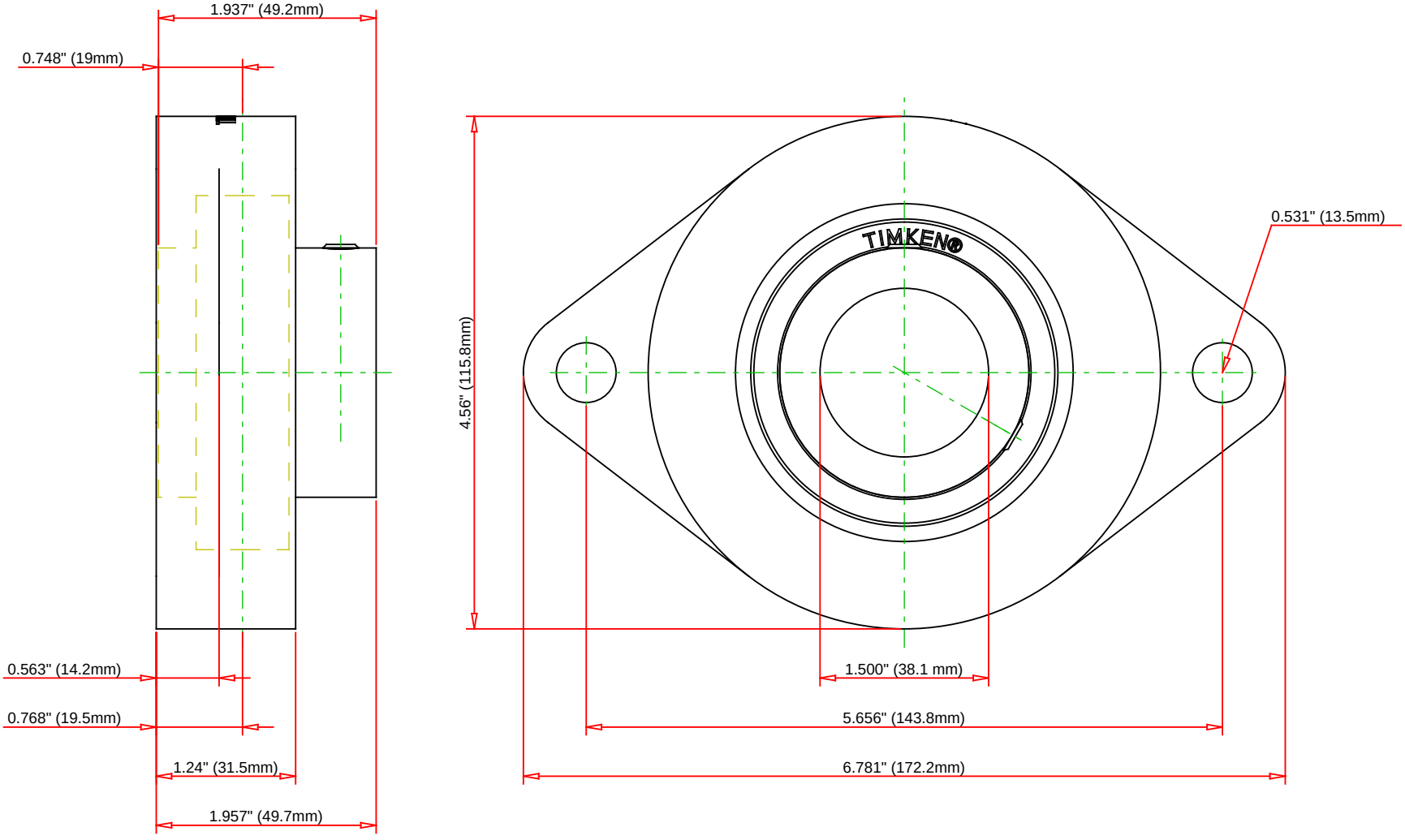

Bearing Number	SUC208-24-IP69K/F				
Load Ratings - C_r	5576	lbf	24800	N	
Load Ratings - C_{0r}	3215	lbf	14300	N	
Lubrication Type	Standard Food Safe Grease				
Housing Material	Blue Thermoset (Polymer)				

TIMKEN

THE TIMKEN COMPANY
NORTH CANTON, OHIO USA

SUCBFL208-24-IP69K/F

Corrosion-Resistant Two-Bolt Flanged Mounted Bearings - Set Screw Locking

Every reasonable effort has been made to ensure the accuracy of the information contained in this writing, but no liability is accepted for errors, omissions or for any other reason.

FOR DISCUSSION ONLY