The Timken Company
4500 Mt Pleasant St. NW
N. Canton, OH 44720
Phone: (234) 262-3000
E-Mail: CustomerCAD@timken.com • **Web site:** www.timken.com

Part Number SUCBFL207-20-IP69K/FVSL613, Corrosion-Resistant Two-Bolt Flanged Mounted Bearings - Set Screw Locking



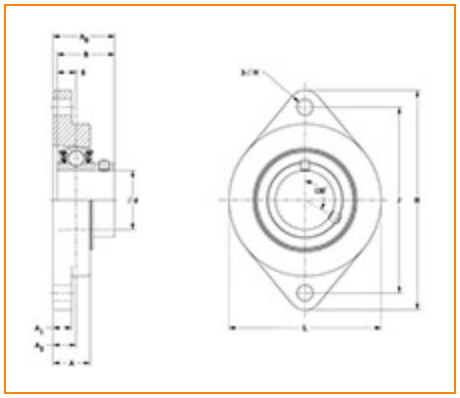

Specifications | Dimensions | Basic Load Ratings

Specifications

Bore Size	1 1/4 in
Seal Type	IP69K Seal
Housing Material	Blue Thermoset (Polymer)
Bearing Number	SUC207-20-IP69K/FVSL613
Lubrication Type	Food Grade Solid Lube
Locking Style	Set Screw Locking
Housing Construction	Two-Bolt Flange

Dimensions

Total Length H	6.252 in 158.8 mm
Total Height L	4.000 in 101.6 mm
Total Width A0	1.791 in 45.5 mm
Bolt Hole Spacing J	5.124 in 130.0 mm
Housing Width A	1.223 in 31.0 mm
Bolt Hole Size N	0.531 in 13.5 mm
Center of Bearing from Housing End A2	0.791 in 20.1 mm
Center of Bearing from Bearing End S	0.689 in 17.5 mm
Inner Ring Width B	1.689 in 42.9 mm

Basic Load Ratings

Static Load Rating	2766 lbf 12300 N
Dynamic Load Rating	4901 lbf 21800 N

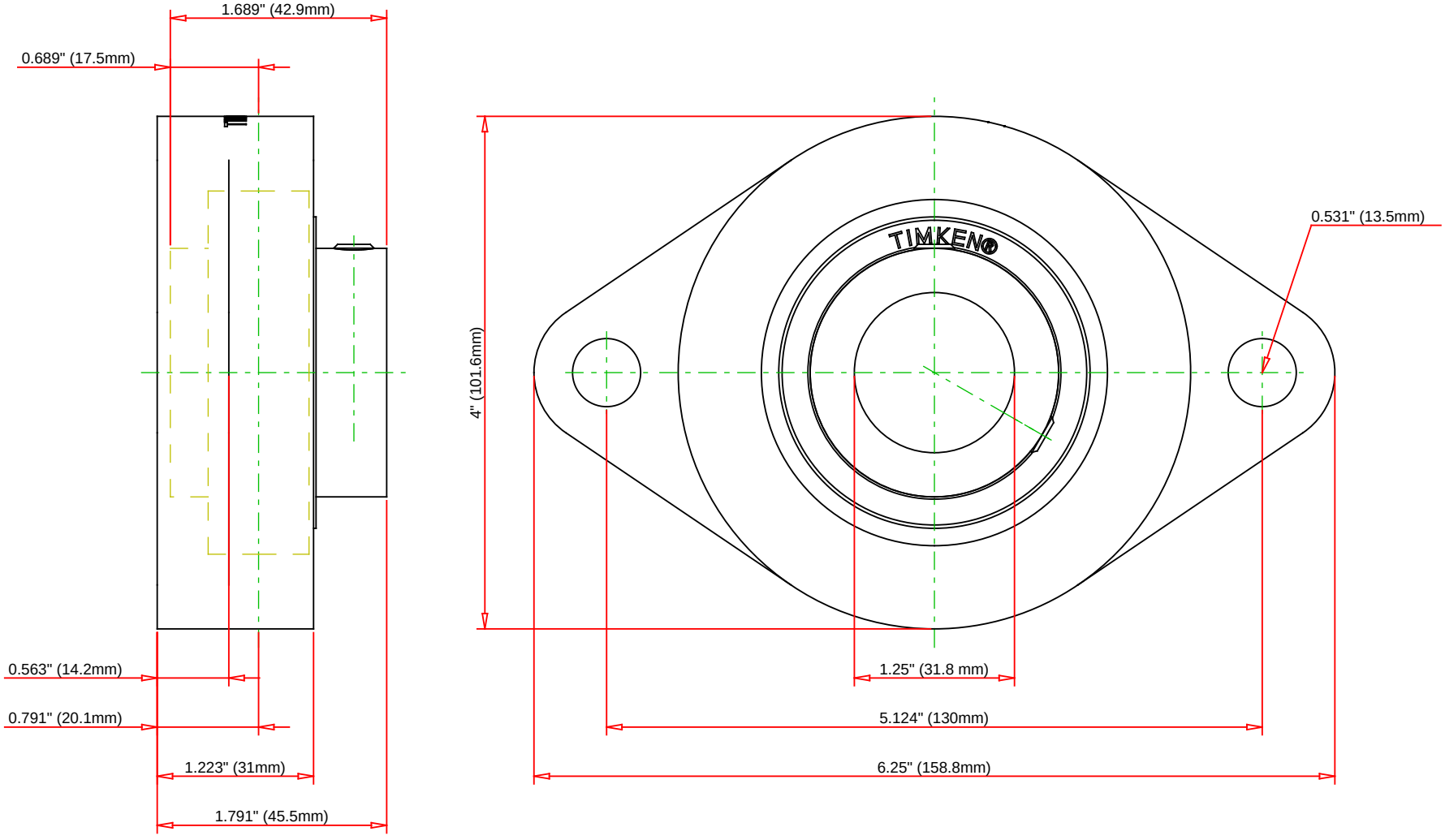

Bearing Number	SUC207-20-IP69K/FVSL613				
Load Ratings - C_r	4901	lbf	21800	N	
Load Ratings - C_{0r}	2766	lbf	12300	N	
Lubrication Type	Food Grade Solid Lube				
Housing Material	Blue Thermoset (Polymer)				

TIMKEN

THE TIMKEN COMPANY
NORTH CANTON, OHIO USA

SUCBFL207-20-IP69K/FVSL613

Corrosion-Resistant Two-Bolt Flanged Mounted Bearings - Set Screw Locking

Every reasonable effort has been made to ensure the accuracy of the information contained in this writing, but no liability is accepted for errors, omissions or for any other reason.

FOR DISCUSSION ONLY