The Timken Company
4500 Mt Pleasant St. NW
N. Canton, OH 44720
Phone: (234) 262-3000
E-Mail: CustomerCAD@timken.com • **Web site:** www.timken.com

Part Number SUCATBYM208-24-IP69K/F, Corrosion-Resistant Tapped Base Mounted Bearings - Set Screw Locking

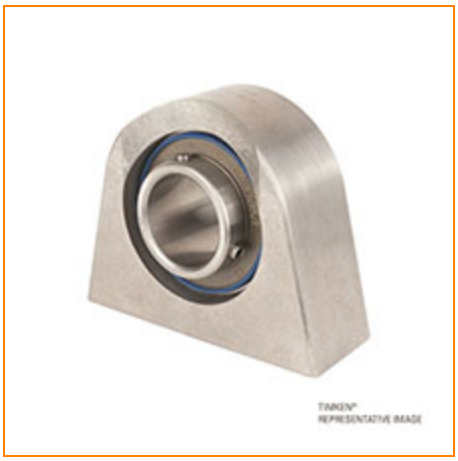

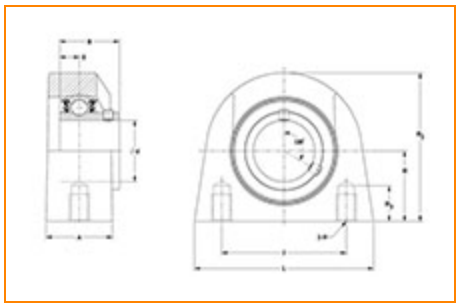

Specifications | Dimensions | Basic Load Ratings

Specifications

Bore Size	1 1/2 in
Seal Type	IP69K Seal
Housing Material	Hygienic Stainless Steel
Bearing Number	SUC208-24-IP69K/F
Lubrication Type	Standard Food Safe Grease
Locking Style	Set Screw Locking
Housing Construction	Tapped Base

Dimensions

Housing Width A	1.630 in 41.4 mm
Total Length L	4.630 in 117.6 mm
Total Height H2	3.940 in 100.1 mm
Thread Length H3	0.752 in 19.1 mm
Bolt Hole Spacing J	3.500 in 88.9 mm
Base to Center Height H	1.938 in 49.3 mm
Center of Bearing from Bearing End S	0.748 in 19.0 mm
Inner Ring Width B	1.937 in 49.2 mm

Basic Load Ratings

Dynamic Load Rating[1]	5576 lbf 24800 N
Static Load Rating	3215 lbf 14300 N

[1] Based on 90×10^6 revolutions L_{10} life, for The Timken Company life calculation method. C_{90} and C_{a90} are radial and thrust values.

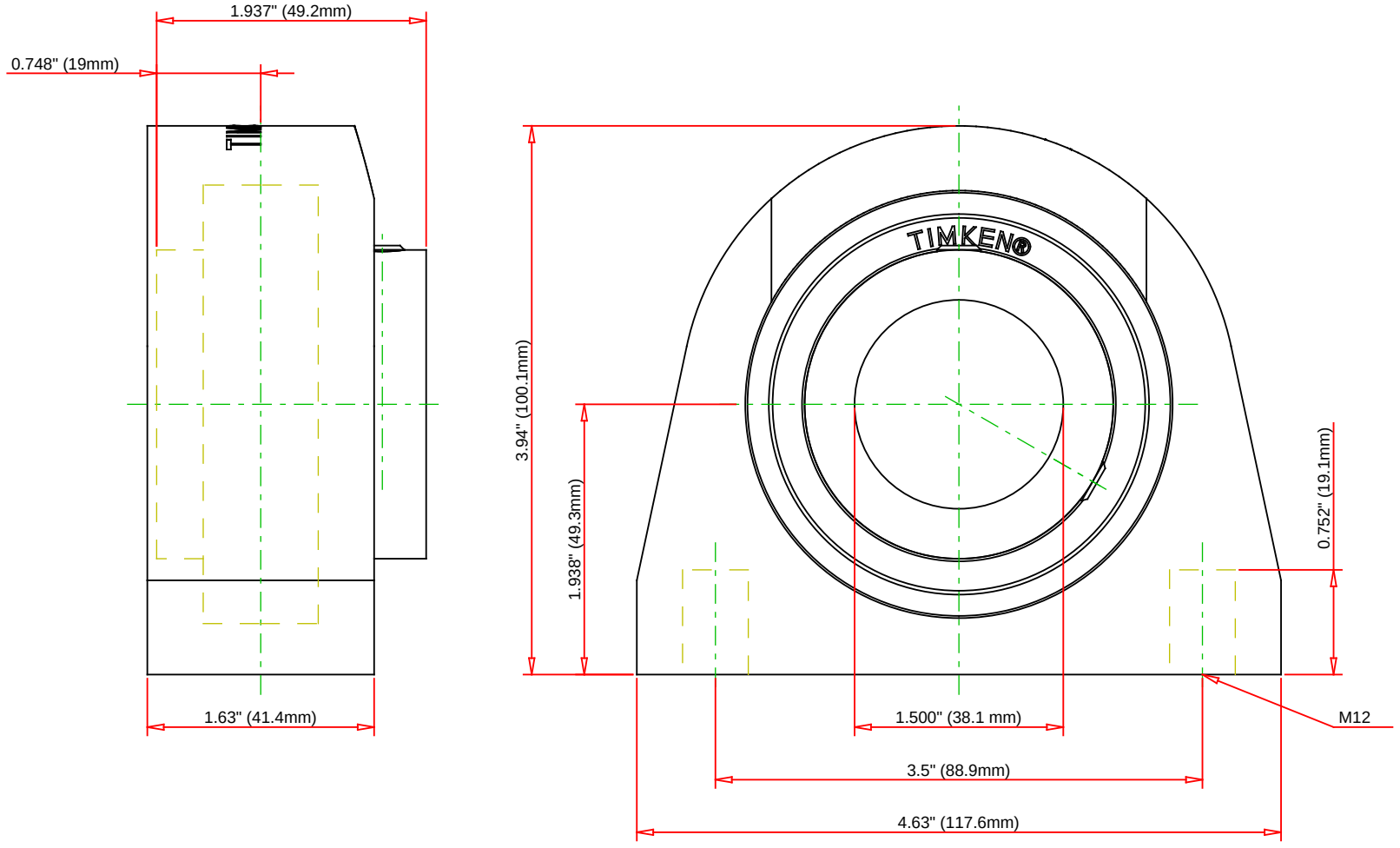

Bearing Number	SUC208-24-IP69K/F				
Load Ratings - C_r	5576	lbf	24800	N	
Load Ratings - C_{0r}	3215	lbf	14300	N	
Lubrication Type	Standard Food Safe Grease				
Housing Material	Hygienic Stainless Steel				

TIMKEN®

THE TIMKEN COMPANY
NORTH CANTON, OHIO USA

SUCATBYM208-24-IP69K/F

Corrosion-Resistant Tapped Base Mounted Bearings - Set Screw Locking

Every reasonable effort has been made to ensure the accuracy of the information contained in this writing, but no liability is accepted for errors, omissions or for any other reason.

FOR DISCUSSION ONLY