The Timken Company
4500 Mt Pleasant St. NW
N. Canton, OH 44720
Phone: (234) 262-3000
E-Mail: CustomerCAD@timken.com • **Web site:** www.timken.com

Timken Part Number H961649 - H961610, Tapered Roller Bearings - TS (Tapered Single) Imperial

This is the most basic and most widely used type of tapered roller bearing. It consists of two main separable parts: the cone (inner ring) assembly and the cup (outer ring). It is typically mounted in opposing pairs on a shaft.



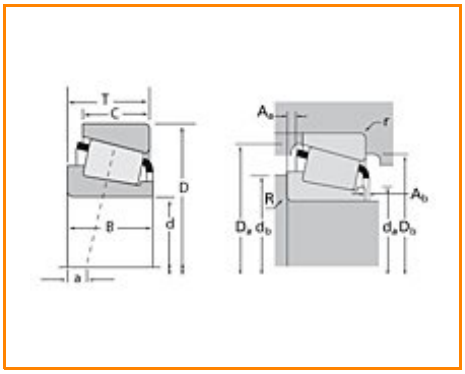

Specifications | Dimensions | Abutment and Fillet Dimensions | Basic Load Ratings | Factors

Specifications

Series	H961600
Cone Part Number	H961649
Cup Part Number	H961610
Design Units	Imperial
Bearing Weight	178.10 Kg 392.70 lb
Cage Type	Pin-Type

Dimensions

d - Bore	317.500 mm 12.5000 in
D - Cup Outer Diameter	622.300 mm 24.5000 in
B - Cone Width	131.763 mm 5.1875 in
C - Cup Width	82.550 mm 3.2500 in
T - Bearing Width	147.638 mm 5.8125 in

Abutment and Fillet Dimensions

R - Cone Backface "To Clear" Radius[1]	14.220 mm 0.560 in
r - Cup Backface "To Clear" Radius[2]	12.70 mm 0.500 in
da - Cone Frontface Backing Diameter	373.13 mm 16.30 in
db - Cone Backface Backing Diameter	409.96 mm 16.14 in
Da - Cup Frontface Backing Diameter	581.70 mm 23.11 in
Db - Cup Backface Backing Diameter	531.11 mm 20.91 in
Ab - Cage-Cone Frontface Clearance	21.3 mm 0.84 in
Aa - Cage-Cone Backface Clearance	25.7 mm 1.01 in
a - Effective Center Location[3]	60.50 mm 2.38 in

Basic Load Ratings

C90 - Dynamic Radial Rating (90 million revolutions)[4]	819000 N 184000 lbf
C1 - Dynamic Radial Rating (1 million revolutions)[5]	3160000 N 710000 lbf
C0 - Static Radial Rating	4130000 N 927000 lbf
C_{a90} - Dynamic Thrust Rating (90 million revolutions)[6]	1310000 N 295000 lbf

Factors

K - Factor[7]	0.62
e - ISO Factor[8]	0.94
Y - ISO Factor[9]	0.64
G1 - Heat Generation Factor (Roller-Raceway)	2500
G2 - Heat Generation Factor (Rib-Roller End)	149
Cg - Geometry Factor	0.24

[1] These maximum fillet radii will be cleared by the bearing corners.

[2] These maximum fillet radii will be cleared by the bearing corners.

[3] Negative value indicates effective center inside cone backface.

[4] Based on 90 x 10^6 revolutions L_{10} life, for The Timken Company life calculation method. C_{90} and C_{a90} are radial and thrust values.

[5] Based on 1 x 10^6 revolutions L_{10} life, for the ISO life calculation method.

[6] Based on 90 x 10^6 revolutions L_{10} life, for The Timken Company life calculation method. C_{90} and C_{a90} are radial and thrust values for a single-row, $C_{90(2)}$ is the two-row radial value.

[7] These factors apply for both inch and metric calculations. Consult your Timken representative for instruction on use.

[8] These factors apply for both inch and metric calculations. Consult your Timken representative for instruction

on use.

[9] These factors apply for both inch and metric calculations. Consult your Timken representative for instruction on use.

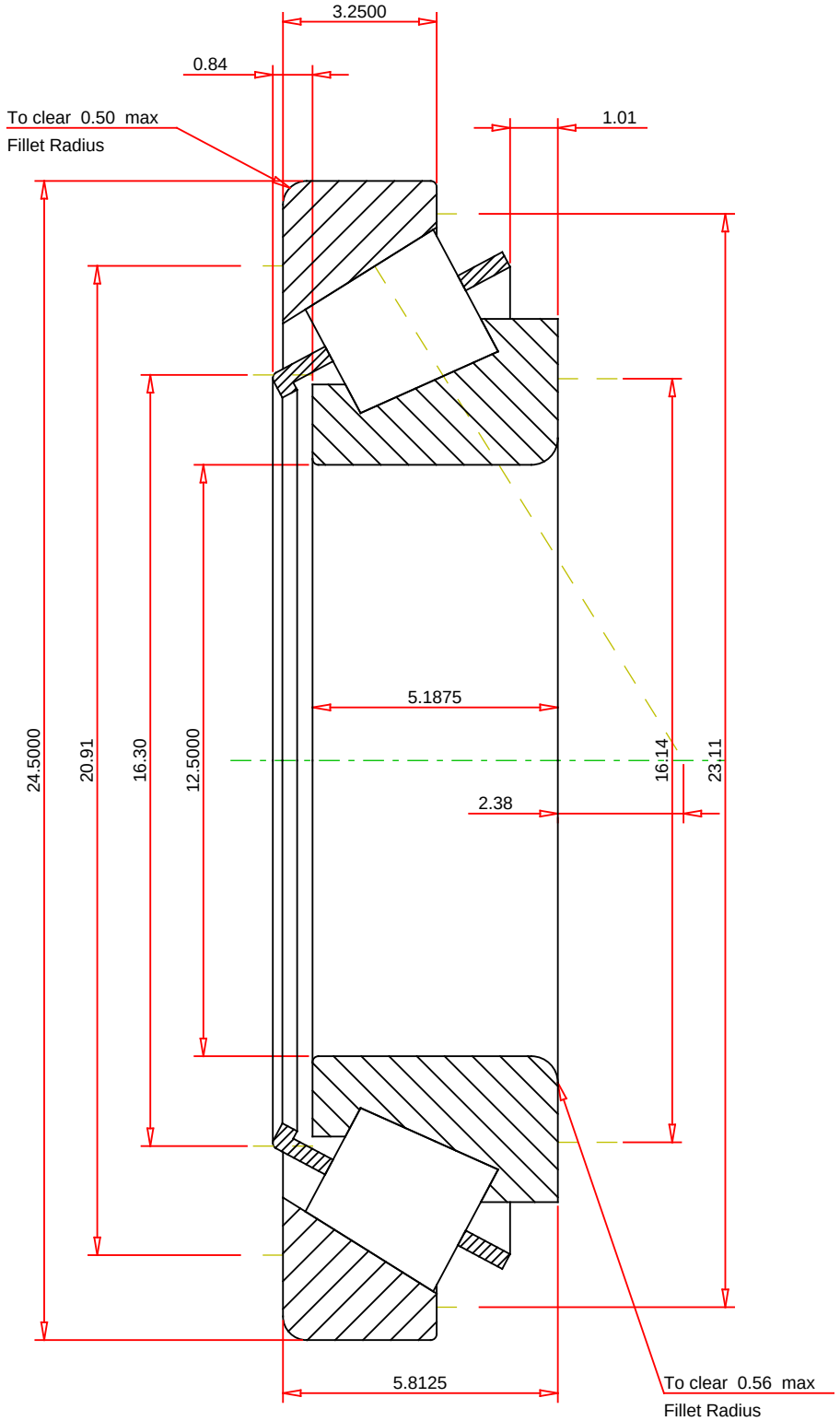

IMPERIAL UNITS

ISO Factor - e	0.94	
ISO Factor - Y	0.64	
Bearing Weight	392.7	lb
Number of Rollers Per Row	18	
Effective Center Location	2.38	inch

TIMKEN

THE TIMKEN COMPANY
NORTH CANTON, OHIO USA

H961649 - H961610
TS BEARING ASSEMBLY

K Factor	0.62	
Dynamic Radial Rating - C90	819000	lbf
Dynamic Thrust Rating - Ca90	1310000	lbf
Static Radial Rating - C0	4130000	lbf
Dynamic Radial Rating - C1	3160000	lbf

Every reasonable effort has been made to ensure the accuracy of the information contained in this writing, but no liability is accepted for errors, omissions or for any other reason.

FOR DISCUSSION ONLY