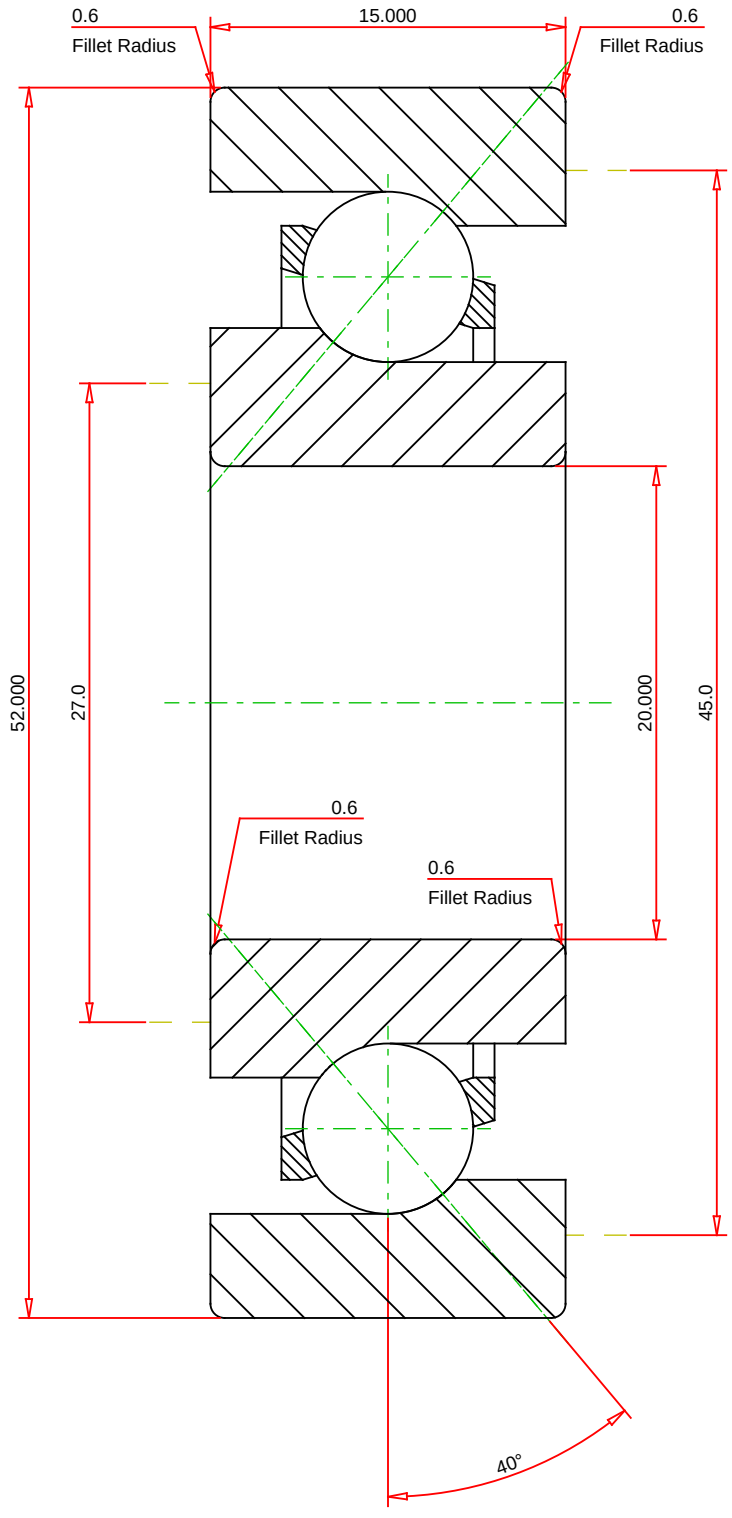

METRIC UNITS

Number of Balls Per Row	10	
Bearing Weight	0.140	kg

TIMKEN®

THE TIMKEN COMPANY
NORTH CANTON, OHIO USA

7304 BTN1

Timken® Single Row Angular Contact Ball Bearings
(7200, 7300)

Dynamic Radial Rating	17300	N
Static Radial Rating	9700	N

Every reasonable effort has been made to ensure the accuracy of the information contained in this writing, but no liability is accepted for errors, omissions or for any other reason.

FOR DISCUSSION ONLY